PRICE $1.00

Assembling and Using Your...

Heathkit

"APACHE" TRANSMITTER

MODEL TX-1

595-192

HEATH COMPANY

A Subsidiary of Daystrom Inc.

BENTON HARBOR, MICHIGAN

STANDARD COLOR CODE — RESISTORS AND CAPACITORS

AXIAL LEAD RESISTOR

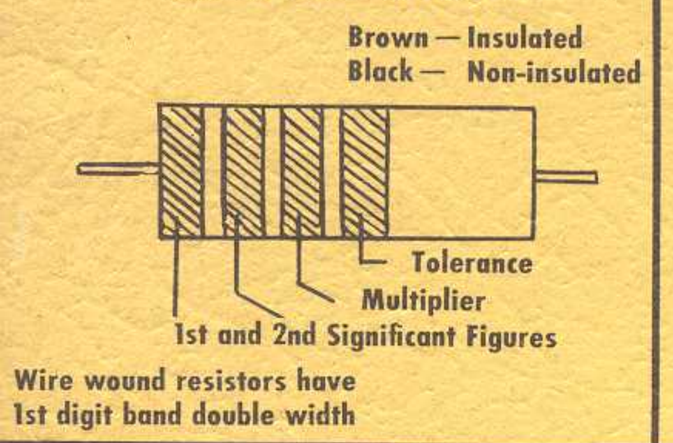

INSULATED UNINSULATED Color	FIRST RING BODY COLOR First Figure	SECOND RING END COLOR Second Figure	THIRD RING DOT COLOR Multiplier
BLACK	0	0	None
BROWN	1	1	0
RED	2	2	00
ORANGE	3	3	,000
YELLOW	4	4	0,000
GREEN	5	5	00,000
BLUE	6	6	000,000
VIOLET	7	7	0,000,000
GRAY	8	8	00,000,000
WHITE	9	9	000,000,000

DISC CERAMIC RMA CODE

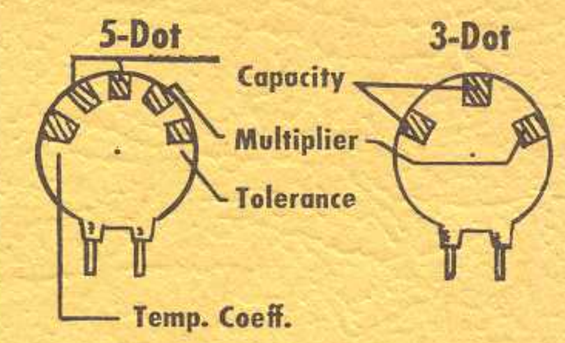

RADIAL LEAD DOT RESISTOR

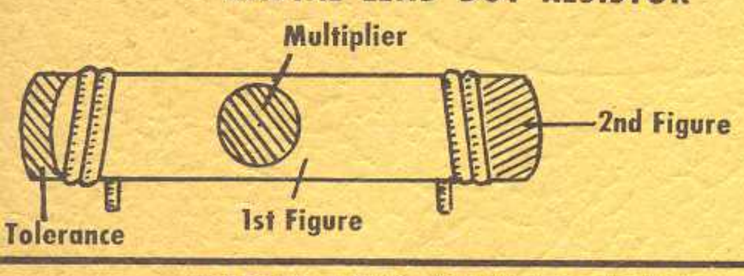

5-DOT RADIAL LEAD CERAMIC CAPACITOR

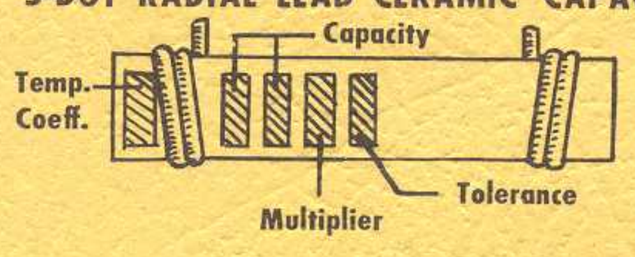

EXTENDED RANGE TC CERAMIC HICAP

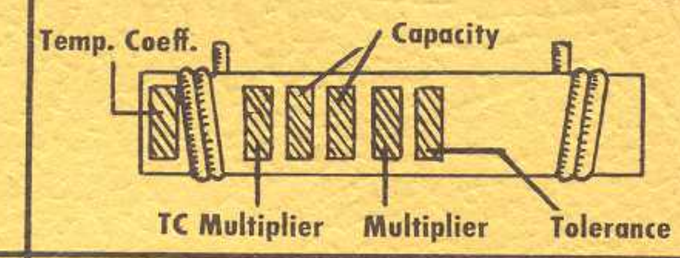

RADIAL LEAD (BAND) RESISTOR

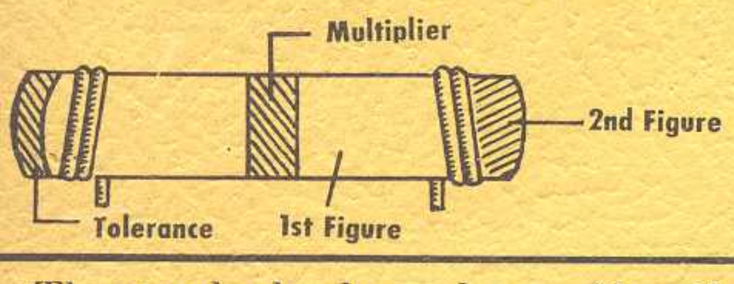

BY-PASS COUPLING CERAMIC CAPACITOR

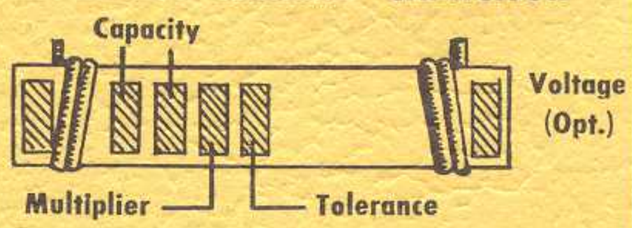

AXIAL LEAD CERAMIC CAPACITOR

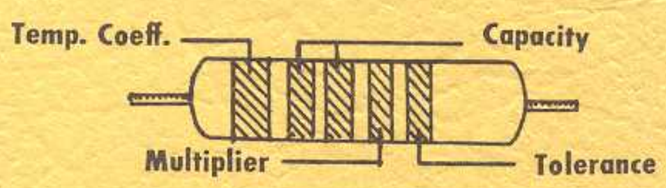

The standard color code provides all necessary information required to properly identify color coded resistors and capacitors. Refer to the color code for numerical values and the zeroes or multipliers assigned to the colors used. A fourth color band on resistors determines tolerance rating as follows: Gold = 5%, silver = 10%. Absence of the fourth band indicates a 20% tolerance rating.

The physical size of carbon resistors is determined by their wattage rating. Carbon resistors most commonly used in Heathkits are ½ watt. Higher wattage rated resistors when specified are progressively larger in physical size. Small wire wound resistors ½ watt, 1 or 2 watt may be color coded but the first band will be double width.

MOLDED MICA TYPE CAPACITORS

CURRENT STANDARD CODE

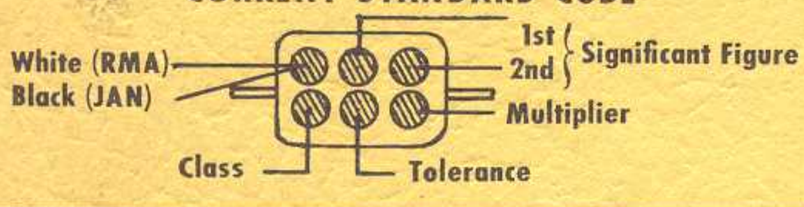

JAN & 1948 RMA CODE

RMA 3-DOT (OBSOLETE) RATED 500 W.V.D.C. ± 20% TOL.

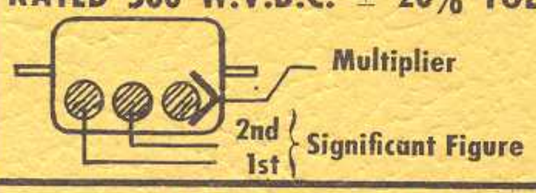

BUTTON SILVER MICA CAPACITOR

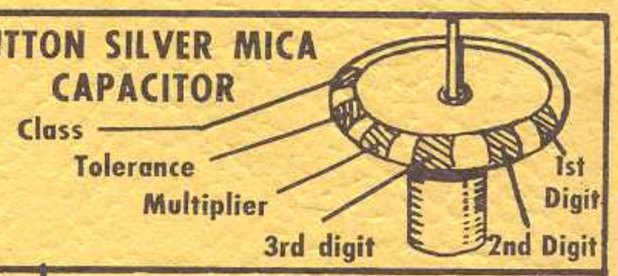

RMA (5-DOT OBSOLETE CODE)

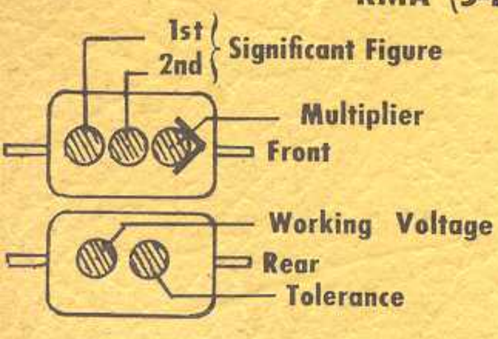

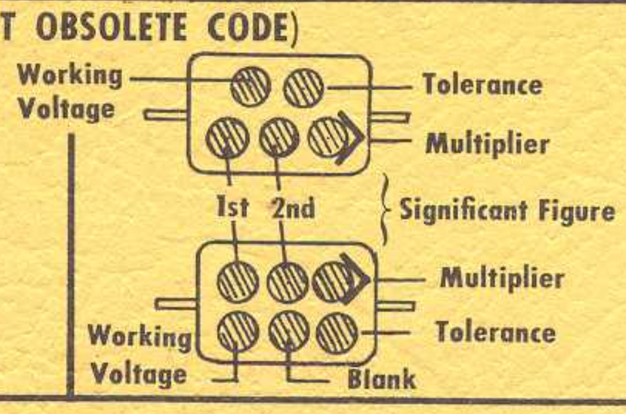

RMA 6-DOT (OBSOLETE)

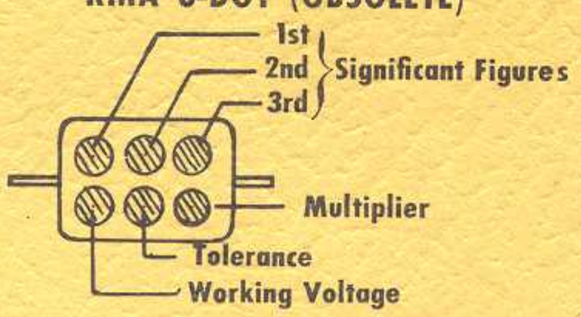

RMA 4-DOT (OBSOLETE)

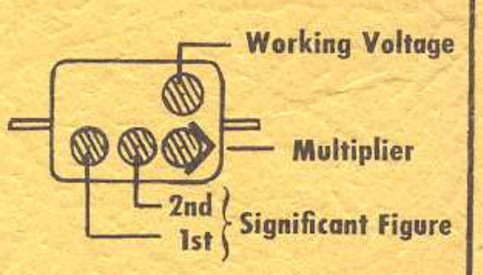

MOLDED PAPER TYPE CAPACITORS

TUBULAR CAPACITOR

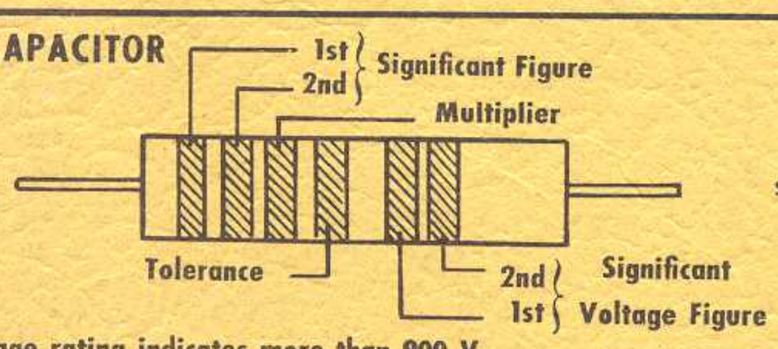

Normally stamped for value

A 2 digit voltage rating indicates more than 900 V. Add 2 zeros to end of 2 digit number.

MOLDED FLAT CAPACITOR

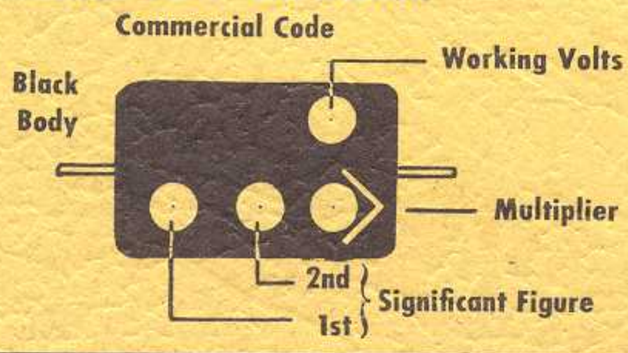

JAN. CODE CAPACITOR

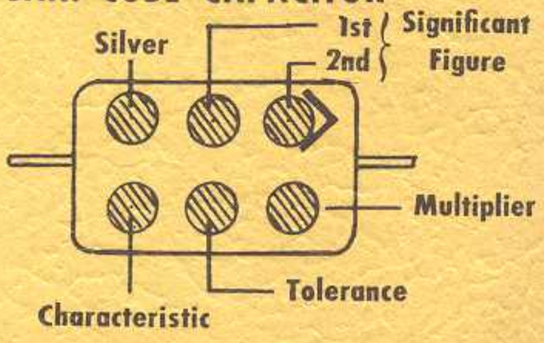

The tolerance rating of capacitors is determined by the color code. For example: red = 2%, green = 5%, etc. The voltage rating of capacitors is obtained by multiplying the color value by 100. For example: orange = 3 × 100 or 300 volts. Blue = 6 × 100 or 600 volts.

In the design of Heathkits, the temperature coefficient of ceramic or mica capacitors is not generally a critical factor and therefore Heathkit manuals avoid reference to temperature coefficient specifications.

Courtesy of Centralab

ASSEMBLY AND OPERATION OF THE HEATHKIT "APACHE" TRANSMITTER

MODEL TX-1

SPECIFICATIONS

RF Power Input	150 watts phone, 180 watts CW.
Output Impedance	50-72 ohm (Non-Reactive).
Output Coupling	Pi Network (Coaxial).
Operation	Crystal-VFO, CW-SSB-Phone (Time Sequence Keying, SSB requires External Adapter).
Band Coverage	80, 40, 20, 15, 10 meters (11 meters with Crystal Control).
Audio Output	100 watts at 300-3000 cps (Adjustable low-level speech clipping; 500 ohm output available).
Tube Complement:	
Power Section	Selenium Bias Rectifiers 5V4 Low Voltage Rectifier. 2-5R4GY HV Rectifier. OA2 Voltage Regulator. 2-OB2 Voltage Regulator.
Audio Section	12AX7 Speech Amplifier. 12AU7 Clipper Amplifier. 6AL5 Clipper. 12BY7 Audio Driver 2-6CA7/EL34 Modulator
RF Section	6AU6 VFO. 6CL6 Crystal Oscillator-Buffer. 5763 Driver. 2-6146 Parallel Power Amplifier. 6AQ5 Clamp.
Power Requirements	115 VAC, 50-60 cps.
Standby (AM, CW)	150 Watts.
Standby (SSB)	230 Watts.
CW	420 Watts (Intermittent).
Phone	500 Watts (peak).
SSB	500 Watts (peak).
Cabinet Size	19 1/2" wide, 11 5/8" high, 16" deep.
Net Weight	95 lbs.
Shipping Weight	107 lbs.

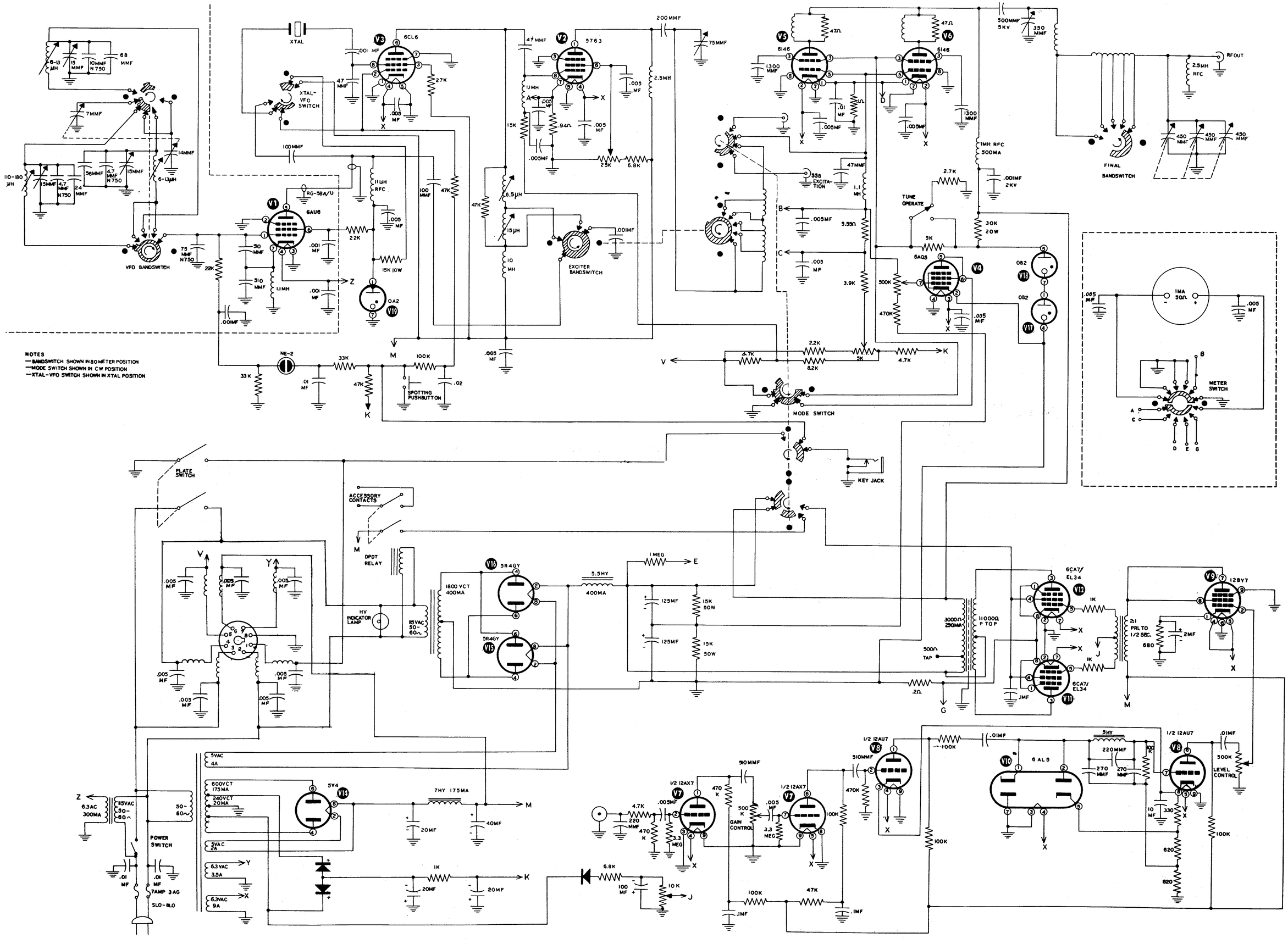

HEATHKIT "APACHE" TRANSMITTER

MODEL TX-1

INTRODUCTION

The Heathkit "Apache" Model TX-1 represents the complete transmitting complement of the amateur station, enclosed in a modern, attractively styled cabinet, and incorporating the refinements necessary for effective and dependable communication. The only external requirements are an antenna, ground, and key or microphone. Panel controls allow VFO or crystal frequency control and phone, CW, or SSB operation on the 80, 40, 20, 15, 10 meter amateur bands. SSB operation requires a suitable SSB adapter, such as the Heathkit SB-10.

In order to provide easy matching to low impedance antennas and suppress harmonic radiation, pi network output coupling is employed. A newly designed VFO features a compact, separate sub-assembly type of construction and provides the frequency stability necessary for SSB operation. Panel controls include key and microphone connections, audio gain, crystal-VFO switch, drive control, band switch, loading control, mode switch (CW-SSB-AM), VFO tuning, driver tuning, final tuning, tune-operate switch, power and plate switches. The accessory socket on the rear apron provides AC line voltage for antenna relay operation plus power and connections for either a voice control unit or SSB adapter. A separate terminal strip provides normally open or normally closed contacts operated simultaneously with the plate switch for receiver muting or other station control functions. If the "Apache" is used as an exciter for a higher powered transmitter, 100 watts of audio at 500 ohms is also available. The "Apache" is extensively compartmented and shielded. The final amplifier is completely enclosed with perforated aluminum shielding. This type of construction increases transmitter stability and greatly decreases radiations that cause TVI.

The following block diagram and circuit description will give the builder a better understanding of the transmitter. This knowledge is an invaluable aid to construction and, as such, is well worth reading thoroughly.

IN A TRANSMITTER OF THIS SIZE, LETHAL VOLTAGES ARE PRESENT. CONSEQUENTLY GREAT CARE MUST BE EXERCISED WHEN ANY TESTS OR ADJUSTMENTS ARE MADE.

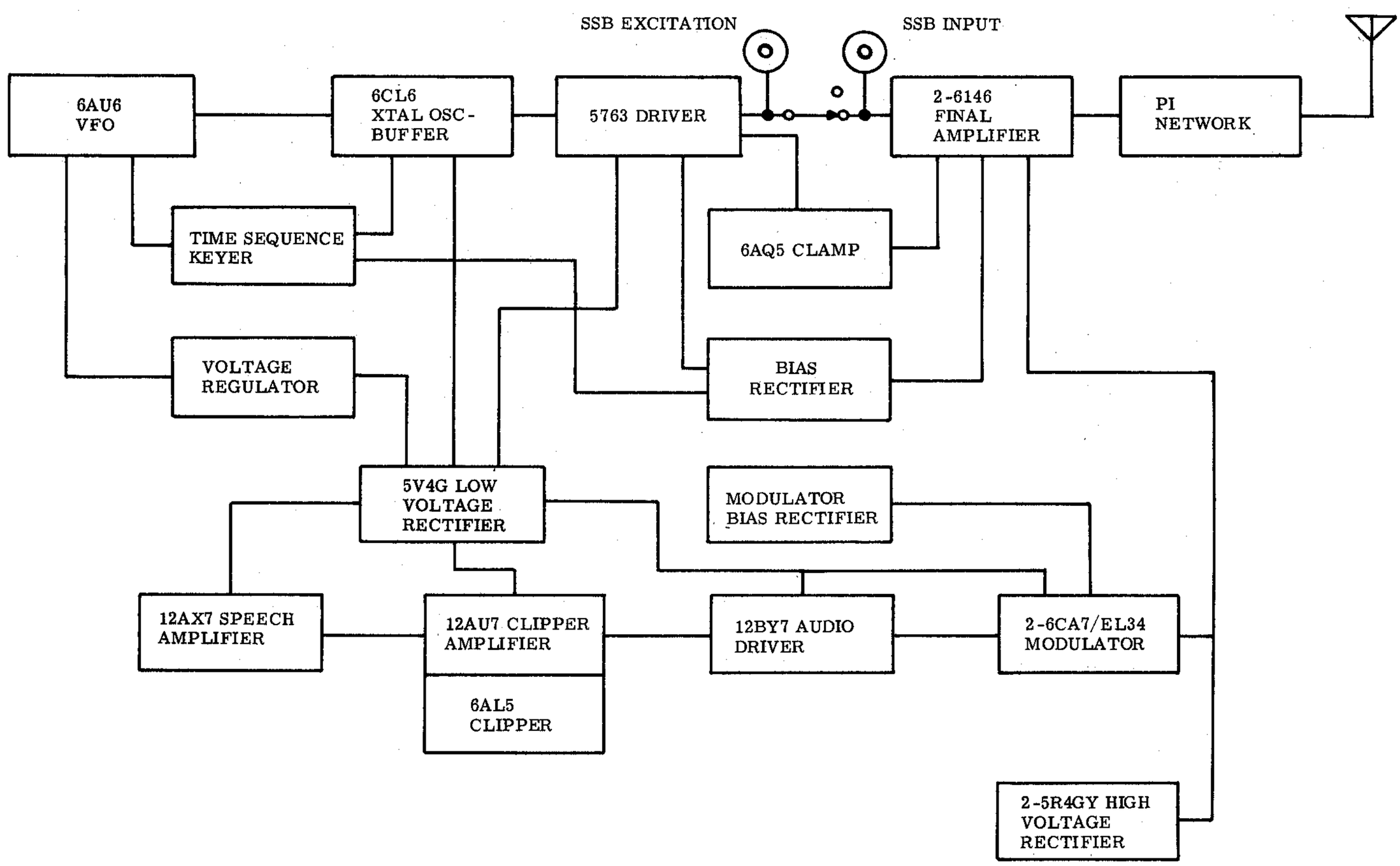

CIRCUIT DESCRIPTION

VFO:

The VFO circuit consists of a 6AU6 tube operating as a Clapp Oscillator in the frequency ranges of 1750 to 2000 KC, 7000 to 7175 KC, and 7000 to 7425 KC. The tube is mounted on top of the rigid, enclosed sub-chassis, thus placing all heat-generating components outside the VFO enclosure. All frequency determining components are rigidly mounted inside the shielded enclosure. A double bearing ceramic insulated tuning capacitor of the differential type is used as a frequency control. The differential capacitor, consisting of two stator assemblies of different capacity, permits a large bandspread at both high and low frequencies.

The coils are wound on heavy ceramic slug-tuned coil forms, heavily doped and baked. The result is a high Q coil upon which ambient conditions have a minimum effect. Careful placement of temperature compensating capacitors near the coils tends to cancel drift due to coil heating. In addition, a temperature compensating capacitor across the grid circuit of the tube, carefully positioned physically, provides additional compensation for other varying inductive parameters.

The VFO switch is operated by an interrupted switching mechanism on the band switch. VFO output frequency is correlated with the band in use as follows: 80M - 1750 to 2000 KC; 40M - 7000 to 7425 KC; 20M - 7000 to 7175 KC; 15M - 7000 to 7175 KC; and 10M - 7000 to 7425 KC. This unique switching system, coupled with the vernier slide-rule, full gear dial drive mechanism, provides more than adequate frequency spread on all bands.

The Clapp, or series tuned Colpitts oscillator circuit, presents a very low impedance at resonance to the tube grid. This minimizes the effect of shift in tube capacitance upon the output frequency. The capacitive voltage divider, necessary for operation of the Colpitts circuit, also lessens the effect of tube capacitance upon frequency. Both screen and plate voltages are stabilized by an OA2 regulator tube in the power supply. To further decrease any effect of tube heating on frequency, the tube filament is operated at all times by a separate filament transformer whose primary is connected to the AC line ahead of the power switch. This serves to keep the tube more nearly at operating temperature and shortens the overall warm-up time. Heat in the tube is further stabilized by a heat conducting insert in the tube shield and by the low plate voltage.

The net result of this design is a stable, compact VFO, especially suited for SSB operation which requires a low drift frequency source.

The output circuit of the VFO is tuned to 80M when the 80M band is used and to 40M when all other bands are used. This tuned circuit consists of the output coaxial cable capacitance (plus 100 mmf in the 80M position) and the RFC in the VFO plate circuit. The increased VFO output thus obtained insures more than adequate drive on all bands. The output is fed to the Xtal-VFO switch. This switch also opens the B+ lead to the VFO when the crystal position is selected.

CRYSTAL OSCILLATOR-BUFFER

A 6CL6 tube is used as a modified Pierce crystal oscillator. This circuit is basically a grounded cathode Colpitts oscillator with the grid-cathode and screen-cathode capacities serving as the capacitive voltage divider. An external 47 mmf capacitor is connected between the screen and ground to increase excitation and prevent sluggish crystal operation. With the Xtal-VFO switch in the crystal position, the crystal is connected between the screen and grid of the 6CL6. In the VFO position, the output of the VFO is connected to the grid of the 6CL6. The plate circuit of the 6CL6 is untuned when operating 80M, slug-tuned to 40M for operation at 40, 20, and 15 meters and slug-tuned to 20M when operating 10M. An untuned RF choke and these two slug-tuned coils are in series with the B+ lead to the 6CL6 plate. One section of the exciter band switch grounds out the coils not being used for a given band. The RF ground is provided by a large capacitor, since a direct short would ground the B+ lead. In the 80M position, this capacitor and switch deck also grounds one side of a 100 mmf capacitor which tunes the VFO output to 80M, as previously mentioned. The output of the 6CL6 is capacitively coupled to the 5763 driver stage.

Time sequence keying is employed in the "Apache" by means of a unique circuit which performs reliably but is quite simple in operation. Referring to the circuit diagram, 120 volts of negative bias voltage is supplied through a 47 K ohm resistor to the keying circuit. The heart of the keying circuit is made up of two RC networks and a NE-2 neon bulb. Assuming the key is up, the neon bulb is lighted and both the VFO and buffer stages are biased beyond cut-off and are therefore inoperative. The 33 K ohm resistor between the VFO side of the neon bulb and ground serves as a load across which the cutoff voltage appears. When the key is closed, the bias voltage is grounded through the 47 K ohm resistor and the voltage at the key is zero. Both the .01 mf, 33 K ohm and .02 mf, 100 K ohm RC networks begin to discharge. Since the .01 mf, 33 K ohm network has the shorter time constant, the neon bulb will extinguish and the VFO will become operative a fraction of a second before the .02, 100 K ohm network has discharged to a point where the buffer stage is operative. When the key is opened, both networks begin to charge and, although the buffer grid RC network charges more slowly than the VFO grid RC network, the buffer grid will be cut-off a fraction of a second before the VFO grid, due to the fact that the VFO grid RC network must reach the comparatively high firing voltage of the neon bulb before the VFO grid will have cut-off bias applied to it. As can be seen in the illustration, the result is a buffer output waveform free from the click and chirp that is present on the VFO output at the instant of key down or key up.

A spotting push-button, which by-passes the key jack and mode switch, is provided for activating the exciter stages, regardless of the mode of operation, for purposes of "zero-beating" and driver tuning. Inspection of the circuit diagram will reveal that, disregarding the spotting push-button, in CW or SSB operation the key or key jack must be closed to produce excitation, while in AM operation, the plate switch must be closed to provide excitation.

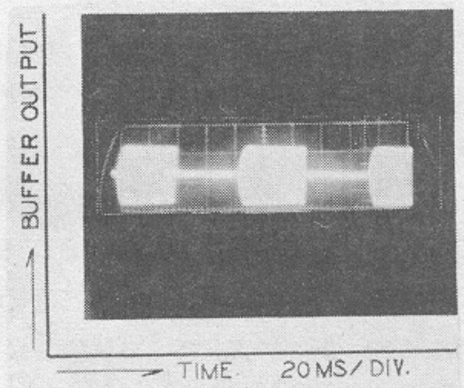

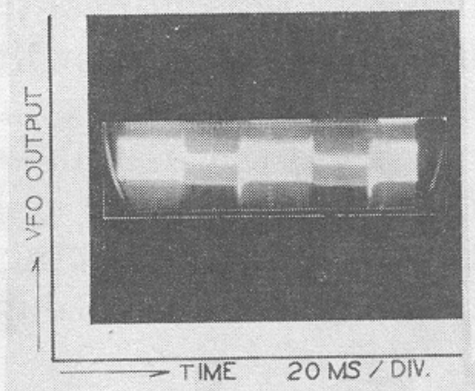

Picture taken from a dual trace scope, but separated for illustrative purposes.

DRIVER

A 5763 tube operating with a combination of fixed and automatic bias, is used to drive the final amplifier. As the stage has plate voltage supplied and the cathode circuit closed at all times, sufficient bias is necessary to keep it from drawing plate current during key up or standby conditions. The additional automatic bias establishes the operating bias during "key down" condition. A meter shunt resistor is permanently connected in the cathode circuit and the meter switched across it when reading driver plate current. The resistance of the shunt is such as to cause the meter to read 50 milliamperes full scale. Potentiometer control of the driver screen voltage allows control of the grid drive to the final amplifier. The plate circuit of the 5763 is shunt fed through an RF choke. Pi network interstage coupling is used between the driver and the final amplifier with the input capacitor of the pi section variable and the output capacitor fixed. The pi section inductance is tapped and the proper tap for each band selected by a section of the exciter band switch. The use of pi network interstage coupling helps reduce the harmonic output of the transmitter. The fixed output capacitor of the pi interstage coupling appears from grid to ground of the final amplifier and shorts out the higher frequency harmonics.

The output of the driver is fed to one deck of the mode switch where it is routed directly to the grid of the final amplifier in CW and AM operation or routed to a coaxial connector on the rear apron in SSB operation. The drive is fed to an SSB adapter for SSB signal generation and the SSB signal is then fed back into the grids of the final amplifier through a second coaxial connector. The capacitance of the connecting coaxial cables provides the output capacitance for the driver output pi network in SSB operation.

FINAL AMPLIFIER

Two 6146 tubes operating in parallel at approximately 750 volts are used as the power amplifier. The amplifier operates in Class C for CW and AM operation and in Class AB1 for SSB operation. Here, as in the driver, a combination of fixed and automatic bias is used to establish the operating and standby conditions. In addition to the fixed bias, the screens of the 6146 tubes are clamped by a 6AQ5 during Class C operation. The action of the clamp tube follows.

The screen voltage to the 6146's is obtained through a dropping resistor from the plate supply and the 6AQ5 tube plate is connected at the 6146 screen. The 6AQ5 cathode is grounded and its grid is common to the grid circuit of the 6146 stage. As long as grid excitation is obtained from the preceding stage, the bias developed keeps the clamp tube cut off and it does not draw current. If excitation is lost, the 6AQ5 grid goes to zero and the tube draws heavy current, dropping the voltage of the 6146 screen to a very low value, thus further protecting the 6146 stage. The fixed bias applied to the grids of the 6146 stage would normally keep the 6AQ5 cut off also, regardless of loss of excitation. Consequently, a sufficient positive voltage is applied to the 6AQ5 grid to just balance the fixed bias but not the operating bias. This allows the clamp tube to be cut off by the operating bias only.

When modulating tetrode tubes, it is necessary to modulate the screen as well as the plate. This is accomplished by supplying the screen voltage through a dropping resistor from the plate voltage.

As explained previously in the discussion on the driver stage, the driver output is fed to an SSB adapter for SSB operation and the SSB signal thus generated is fed back to the grids of the final amplifier. The mode switch, besides rerouting the driver output, also places the final amplifier in Class AB1 operation. The 6AQ5 clamp tube is disconnected from the screens and two OB_2 regulator tubes in series are connected between the screens and ground, thereby establishing the proper screen voltage. Fixed bias of the correct value is supplied from the bias rectifier. This value of fixed bias is the same as that supplied for Class C operation, remembering that the rest of the Class C bias is obtained automatically by grid current flowing through the final amplifier grid resistors. However, no grid current flows in Class AB_1 operation, so the fixed bias supplied can be made correct for both modes of operation without any readjustments or switching. In addition, the mode switch, when placed in SSB position, transfers the grounded end of the bias resistor string to a connection on the accessory socket. This allows a voice control unit relay, almost universally used because of SSB duplex operation, to safely bias the final amplifier to cutoff during standby periods by merely ungrounding the bias resistor string. During SSB operation, the plate voltage is left on at all times, avoiding excessive switching of primary power that would be encountered in duplex operation.

A tune-operate switch is provided to reduce final amplifier input during tune-up periods, thus preventing damage to the tubes due to excessive off-resonance plate current. This switch merely connects the tube screens to a low-voltage point on a resistive screen voltage divider, thus limiting the plate current to a safe off-resonance value.

Final amplifier grid current is read by switching the meter across the shunt which is left permanently in the grid circuit. This shunt is of such a value as to cause the meter to read 10 milliamperes full scale. Final amplifier plate current is read by switching the meter across a shunt which is left permanently in the final amplifier cathode circuit. This shunt is of such a value as to cause the meter to read 500 milliamperes full scale.

The tank circuit of the final amplifier is pi coupled to the antenna using a 350 mmf variable capacitor on the input side, a tapped inductor operating from the band switch, and a large three-gang variable capacitor with a total capacitance of 1350 mmf on the output side. The large output variable capacitor allows a smooth, continuous antenna loading operation.

The 6146 tubes are mounted on short spacers just above the chassis top plate; this permits very short cathode return paths from plate and grid and, since the grid leads pass directly through the chassis from the tube socket connection, serves to effectively isolate the grid circuit from the plate circuit, thus increasing stability. The entire final amplifier is enclosed in an "RF

tight" perforated shield. Perforations are placed in the chassis top plate to create a chimney effect causing air to flow up past the tubes for cooling.

AUDIO

Two triode stages of resistance coupled speech amplification are combined in a 12AX7 tube, giving sufficient gain for a low level crystal or dynamic microphone. In amateur communications, it is desirable to sacrifice fidelity in favor of narrow bandwidth and intelligibility. Therefore, the audio circuitry in the "Apache" is designed to limit the frequency response to the normal voice range of 300-3000 cps. To limit the low frequency response of the speech amplifier, small coupling capacitors are used as they present a high reactance at the lower frequencies. The higher frequencies over 3000 cps are attenuated by a low pass filter following the clipper stage.

Another stage of amplification consisting of one-half of a 12AU7 twin-triode follows the speech amplifier and the output of this stage is fed to a 6AL5 dual diode functioning as a clipper. The 6AL5 cathodes are biased positive with voltage obtained from the following stage's cathode bias string. The diode bias is such that when the peak to peak voltage of the audio signal exceeds approximately 6 volts, the diodes conduct and prevent further increase in amplitude. The high, sharp peaks of the speech waveform which are not necessary for intelligibility but still contribute to modulation of the carrier, can be clipped off, thus allowing the lower level components of the speech waveform to be increased. The result is a considerable increase in the average level of modulation and a more penetrating modulated carrier.

The audio from the clipper stage is fed through a low pass filter that cuts off sharply above 3000 cps. This serves to remove much of the harmonic content of the clipped waveform, thus reducing distortion, in addition to restricting the high frequency response of the amplifier. The other half of the 12AU7 is used as another stage of amplification following the low-pass filter.

Two gain controls are provided in the "Apache" modulator. The audio gain control between the first two stages of the speech amplifier operates as a combined gain and clipping control. The level control, at the input to the 12BY7 audio driver stage, serves to set the 100% modulation level. The gain control can be set to give normal unclipped modulation by merely setting the peak input to the clipper just at the threshold of clipping. The level control can then be set to give 100% modulation. Thus, by further increasing the gain, the input to the clipper is increased and more and more clipping can be introduced without overmodulating the carrier due to the limiting action of the clipper.

The 12BY7 pentode audio driver tube is triode connected to present a low impedance to the modulator grids. In class AB_2 audio, the modulator grids draw current on positive peaks, consequently the driver stage must deliver some power to the grids. By using a low impedance power source, less impedance variation will result between times of load and no load, as the driver swings from positive to negative. The 12BY7 driver feeds the modulator grids through a 2 to 1 stepdown transformer, thus further lowering the grid impedance. Two 6CA7/EL34 tubes operating class AB_2 constitute the modulator stage. They are capable of approximately 100 watts output, but are normally operated at about a 75 watt level. Series resistors in the grid circuit prevent the grids from swinging too far positive and thus limit the output below the highest obtainable. A meter shunt in the cathode circuit of the modulators allows monitoring of the modulator plate current. The shunt is of such a value as to cause a full-scale meter reading of 250 milliamperes.

The modulation transformer provides the proper match between the modulator output impedance and the load impedance. The transformer is rated at a full 100 watts and a 500 ohm output tap is provided for driving external loads. When the transmitter is operated on CW or SSB, the mode switch removes the screen voltage from the modulator tubes and shorts out the secondary of the modulation transformer.

LOW VOLTAGE POWER SUPPLY

The low voltage power transformer contains all the filament windings, including the filament winding for the high voltage rectifiers. It also has a tapped secondary to supply the bias rectifiers. One separate 6.3 volt winding supplies heater voltage to the accessory socket. The low voltage supply, with a 5V4 rectifier and condenser input filter, delivers 350 volts at 175 milliamperes to the low power audio and RF stages, modulator screens, and accessory socket. The taps on the secondary in conjunction with the full wave selenium bias rectifier and condenser input filter deliver 150 volts of negative bias voltage at 20 milliamperes. A resistance network on the bias supply applies the correct bias to the final amplifier and driver. A half wave selenium rectifier on one side of the bias winding plus a variable tapped resistance voltage divider provides a separate adjustable modulator bias voltage.

HIGH VOLTAGE POWER SUPPLY

The high voltage supply consists of the plate transformer, parallel 5R4GY rectifiers, choke input filter with two 125 mfd electrolytic filter capacitors in series. A center tapped bleeder balances the series capacitors.

Ordinarily well designed power supplies using conventional values of paper or oil capacitors, have been found to make violent voltage excursions as loads are suddenly applied or removed. This is known as the dynamic regulation characteristic. To eliminate these voltage excursions, larger capacitors than are practical in the paper or oil type are necessary. The two electrolytic capacitors in series result in a filter capacity of 62.5 mfd at 900 volts. This is sufficient capacity to assure good dynamic regulation under keying conditions and a fair safety factor on voltage breakdown. One meter switch position provides a connection for reading the value of plate voltage. The full scale reading is 1000 volts.

When line voltage is applied to the primary of the plate transformer, a DPDT relay is activated which applies screen voltage to the modulators and also activates the accessory contacts for receiver muting or other station control.

All leads leaving the accessory socket or accessory contacts have LC filters. The line cord is by-passed with coaxial type feed-through capacitors. Both sides of the AC line are fused in a special line plug.

NOTES ON ASSEMBLY

Try to provide a work area that will not have to be cleared or disturbed if your work should be interrupted. It is much easier to resume construction if everything can remain in its place until completion of the kit. Provide yourself with good quality tools. The use of improper or inferior tools for assembly of a complex kit such as the "Apache" will cause your workmanship to suffer and result in longer assembly time. There is also a great deal of personal satisfaction in a neat, professional looking transmitter, resulting from careful assembly and wiring. Basic tool requirements consist of a screwdriver with a 1/4" blade; a small screwdriver with a 1/8" blade for set screws and adjustments; long-nose pliers, used to form leads and hold parts; wire cutters, preferably separate diagonal cutters; a pen knife or, preferably, a tool for stripping insulation from wires; a soldering iron or gun and rosin core radio solder. A 1/4" and 5/16" nut-driver, while not necessary, will aid extensively in construction of the transmitter. Be sure to read the paragraphs on soldering before you start wiring the transmitter.

UNPACK THE KIT CAREFULLY AND CHECK EACH PART AGAINST THE PARTS LIST. In so doing, you will become acquainted with each part. Refer to the charts and other information shown on the inside covers of the manual to help you identify any parts about which there may be a question. If some shortage is found in checking the parts, please notify us promptly and return the inspection slip with your letter to us. Hardware items are counted by weight and if a few are missing, please obtain them locally, if at all possible, to avoid delay in the construction of your kit.

Resistors and controls generally have a tolerance rating of ±20% unless otherwise stated in the parts list. Therefore a 1 K ohm resistor may test anywhere from 800 ohm to 1200 ohm. (The letter K is commonly used to designate a multiplier of 1000.) Tolerances on capacitors are generally even greater. Limits of +100% and -50% are common for electrolytic capacitors. The parts furnished with your Heathkit have been specified so as to not adversely affect the operation of the finished instrument.

In order to expedite delivery to you, we are occasionally forced to make minor substitutions of parts. Such substitutions are carefully checked before they are approved and the parts supplied will work satisfactorily. By checking the parts list for resistors, for example, you may find that a 1200 ohm resistor has been supplied in place of a 1 K ohm as shown in the parts list. These changes are self-evident and are mentioned here only to prevent confusion in checking the contents of your kit.

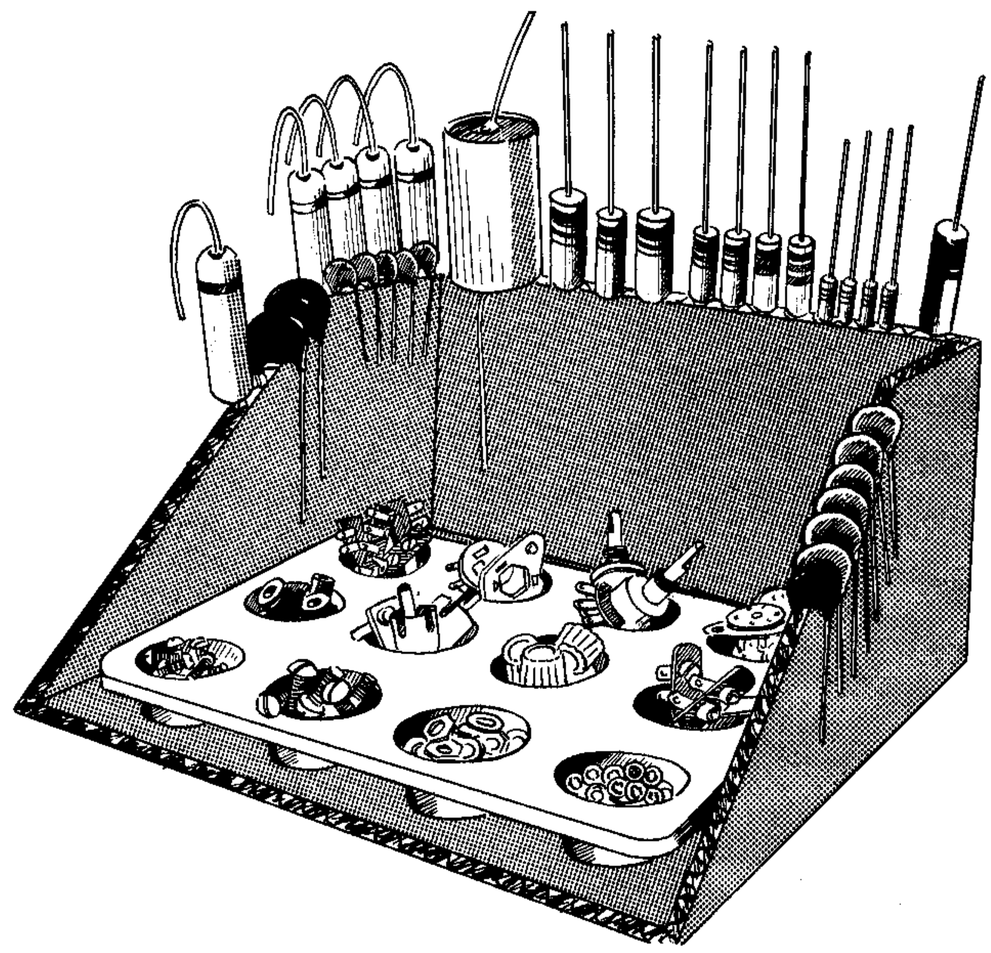

Most kit builders find it helpful to separate the various parts into convenient catagories. Muffin tins or molded egg cartons make convenient trays for small parts. Resistors and capacitors may be placed in the edge of a piece of corrugated cardboard until they are needed. Values can be written on the cardboard next to each component. The illustration shows one method that may be used. Read through the entire manual before starting construction. In this way you will become familiar with the techniques employed in the building of your kit. As a further deterrent to errors, read each step of the construction and wiring completely before performing that step.

Do not try to hurry your work or to work for too long a period at one time. Both courses will lead to carelessness and increased possibility of error. The instructions and illustrations have been prepared to assist you in every detail during construction and use of your transmitter. We urge you to follow them carefully and thus avoid improper operation or the possibility of damage to components through errors in construction. There is a great satisfaction in having your transmitter work properly the first time you turn it on—don't deny yourself this pleasure through careless work.

PROPER SOLDERING PROCEDURE

Only a small percentage of Heathkit purchasers find it necessary to return an instrument for factory service. Of these returns, by far the largest proportion of malfunctions are due to poor or improper soldering.

Correct soldering technique is extremely important. Good solder joints are essential if the performance engineered into the kit is to be fully realized. If you are a beginner with no experience in soldering, a half-hour's practice with odd lengths of wire and a tube socket will be a worthwhile investment.

High quality solder of the proper grade is most important. There are several different brands of solder on the market, each clearly marked "Rosin Core Radio Solder." Such solders consist of an alloy of tin and lead, usually in the proportion of 50:50. Minor variations exist in the mixture such as 40:60, 45:55, etc. with the first figure indicating the tin content. Radio solders are formed with one or more tubular holes through the center. These holes are filled with a rosin compound which acts as a flux or cleaning agent during the soldering operation.

NO SEPARATE FLUX OR PASTE OF ANY KIND SHOULD BE USED. We specifically caution against the use of so-called "non-corrosive" pastes. Such compounds, although not corrosive at room temperatures, will form residues when heated. The residue is deposited on surrounding surfaces and attracts moisture. The resulting compound is not only corrosive but actually destroys the insulation value of non-conductors. Dust and dirt will tend to accumulate on these "bridges" and eventually will create erratic or degraded performance of the instrument.

NOTE: ALL GUARANTEES ARE VOIDED AND WE WILL NOT REPAIR OR SERVICE INSTRUMENTS IN WHICH ACID CORE SOLDER OR PASTE FLUXES HAVE BEEN USED. WHEN IN DOUBT ABOUT SOLDER, IT IS RECOMMENDED THAT A NEW ROLL PLAINLY MARKED "ROSIN CORE RADIO SOLDER" BE PURCHASED.

If terminals are bright and clean and wires free of wax, frayed insulation and other foreign substances, no difficulty will be experienced in soldering. Crimp or otherwise secure the wire (or wires) to the terminal, so a good joint is made without relying on solder for physical strength. To make a good solder joint, the clean tip of the soldering iron should be placed against the joint to be soldered so that the terminal is heated sufficiently to melt solder. The solder is then placed against both the terminal and the tip of the iron and will immediately flow out over the joint. Refer to the sketch below. Use only enough solder to cover wires at the junction; it is not necessary to fill the entire hole in the terminal with solder. Excess solder may flow into tube socket contacts, ruining the socket, or it may creep into switch contacts and destroy their spring action. Position the work so that gravity tends to keep the solder where you want it.

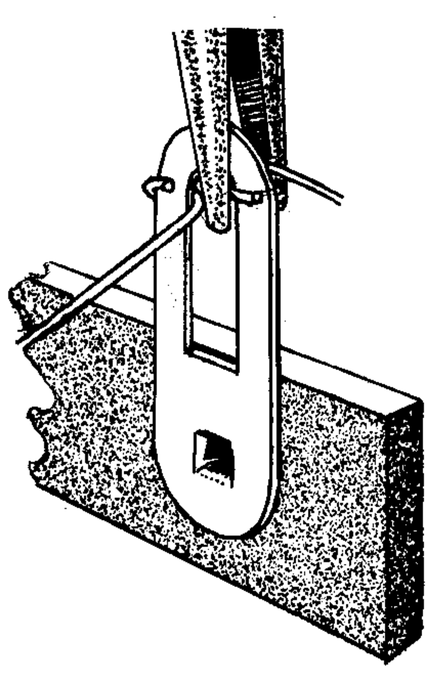

CRIMP WIRES

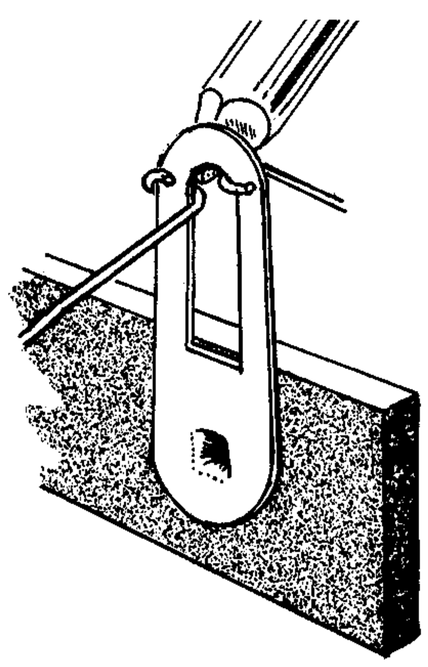

HEAT CONNECTION

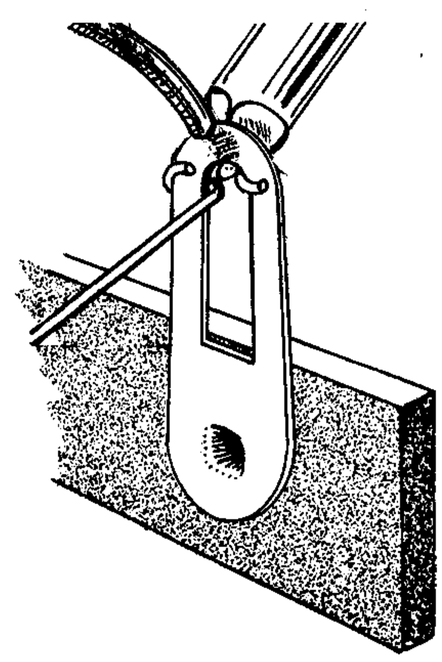

APPLY SOLDER

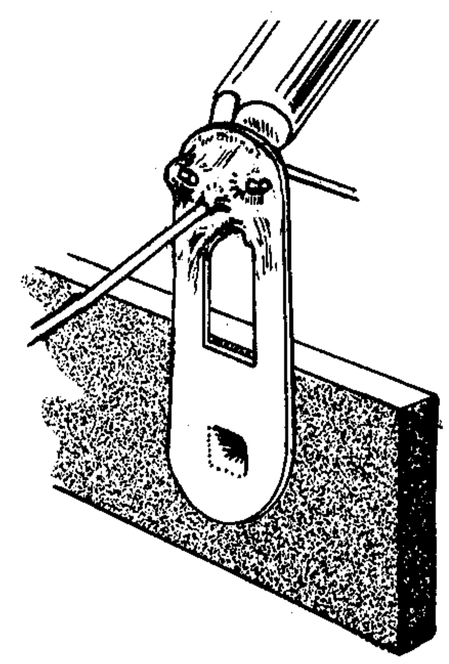

ALLOW SOLDER TO FLOW

A poor solder joint will usually be indicated by its appearance. The solder will stand up in a blob on top of the connection, with no evidence of flowing out caused by actual "wetting" of the contact. A crystalline or grainy texture on the solder surface, caused by movement of the joint before it solidified, is another evidence of a "cold" connection. In either event, reheat the joint until the solder flows smoothly over the entire junction, cooling to a smooth, bright appearance. Photographs below clearly indicate these two characteristics.

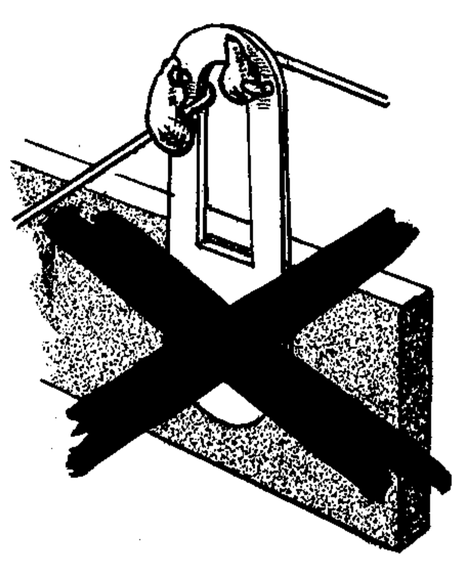

COLD SOLDER JOINT CONNECTION INSUFFICIENTLY HEATED

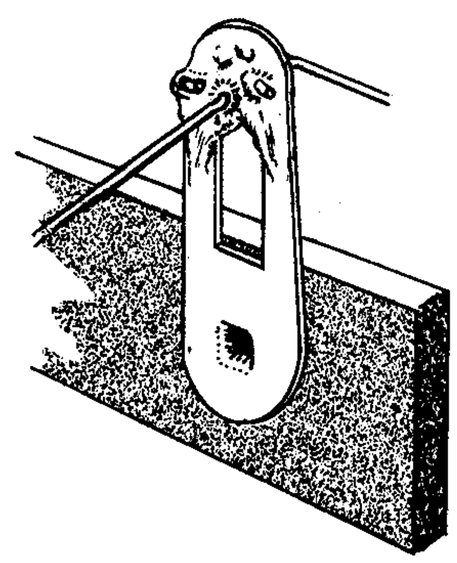

PROPER SOLDER CONNECTION

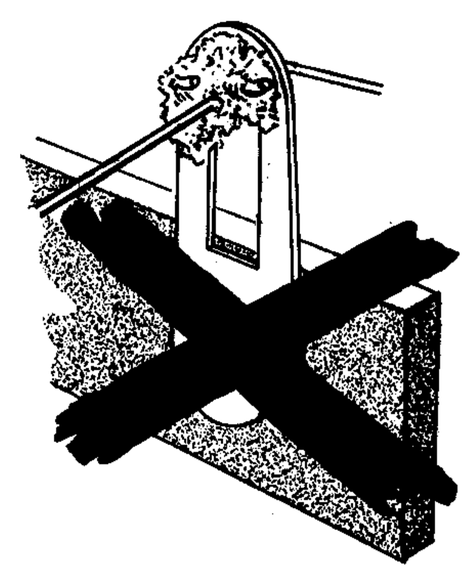

COLD SOLDER JOINT CONNECTION MOVED WHILE COOLING

A good, clean, well-tinned soldering iron is also important to obtain consistently perfect connections. For most wiring, a 60 or 100 watt iron, or the equivalent in a soldering gun, is very satisfactory. Smaller irons generally will not heat the connections enough to flow the solder smoothly over the joint and are recommended only for light work, such as on etched circuit boards, etc. Keep the iron tip clean and bright. A pad of steel wool may be used to wipe the tip occasionally during use.

NOTES ON WIRING

Read the notes on soldering and wiring on the inside rear cover. Crimp all leads tightly to the terminal before soldering. Be sure both the lead and terminal are free of wax, corrosion or other foreign substances. Use only the best rosin core solder, preferably a type containing the new activated fluxes such as Kester "Resin-Five," Ersin "Multicore" or similar types.

Unless otherwise indicated, all wire used is insulated. Wherever there is a possibility of the bare leads on resistors and capacitors shorting to other parts or to chassis, the leads should be covered with insulated sleeving. This is indicated in the instructions by the phrase "use sleeving." Bare wire is used where the lead lengths are short and the possibility of short circuits are minimized.

Leads on resistors, capacitors and transformers are generally much longer than they need to be to make the indicated connections. In these cases, the excess leads should be cut off before the part is added to the chassis. In general, the leads should be just long enough to reach their terminating points. Not only does this make the wiring much neater but in many instances, the excessively long leads will actually interfere with proper operation of the instrument.

The pictorials indicate the actual chassis wiring and designate values of component parts. We very strongly urge that the chassis layout, lead placement, and grounding connections be followed exactly as shown. While the arrangement shown is probably not the only satisfactory layout, it is the result of considerable experimentation and trial. A common factor of radio frequency equipment is the critical placement of leads and components. The use of extensive shielding and compartmenting in the "Apache" has eliminated a great deal of this. However, the lead dress shown in the pictorials should be followed carefully to insure the most stable, accurate, and dependable operation of the transmitter.

Space has been provided for you to check off each operation as it is completed. This is particularly important in wiring and it may prevent omissions or errors, especially where your work is interrupted frequently as the wiring progresses. Some kit builders have also found it helpful to mark each lead in colored pencil on the pictorial as it is added.

The abbreviation "NS" indicates that the connection should not be soldered as yet, for other wires will be added. When the last wire is installed, the terminal should be soldered and the abbreviation "S" is used to indicate this. Note that a number appears after each solder (S) instruction. This number indicates the number of leads connected to the terminal in question. For example, if the instructions read, "Connect a 47 K ohm resistor from socket E1 (S-2) to E6 (S-2)," it will be understood that there will be two leads connected to the terminals at the time it is soldered. This additional check will help avoid errors.

We suggest you do the following before any work is started:

1. Attach the large fold-in pictorials to the wall above your work bench.
2. Go through the entire assembly and wiring instructions. This is an excellent time to read the entire instruction section through and familiarize yourself with the procedure.
3. Lay out all parts so that they are readily available. Refer to the general **information inside** the front and back covers of this manual to help you identify components.

STEP-BY-STEP ASSEMBLY

Due to the complexity and compactness of the TX-1, the construction has been subdivided into several stages arranged in a logical order. The transformers are mounted fairly early in construction to permit all below-chassis wiring to be completed in one stage. After the transformers are mounted, the transmitter need only be turned completely over once, thus keeping the handling of the rather heavy chassis to a minimum. The transformers also serve to hold the chassis solidly in a convenient working position. Due to the weight of the transmitter, it is suggested a rag or some soft material be placed over the workbench or table to prevent marring or scratching the working area surface or transmitter components.

Sometimes the builder may find a place where it is difficult to hold a nut for assembly. A plastic "nut-starter" tool is provided in the kit to aid the builder in this situation. A 3/16" nut may be pressed into one end of the tool and a 1/4" nut may be held in the other end. See the instruction slip on how to use this tool.

VFO STEP-BY-STEP

Considerable emphasis is placed on component orientation and lead length in the VFO step-by-step instructions. It is important that these instructions be followed carefully to insure reliable, low-drift operation of the VFO. All components should be mounted securely and all solder joints should be solid.

( ) Referring to Pictorial 1, locate the VFO sub-chassis and orient as shown, open side up and the top (side with five large holes) away from you.

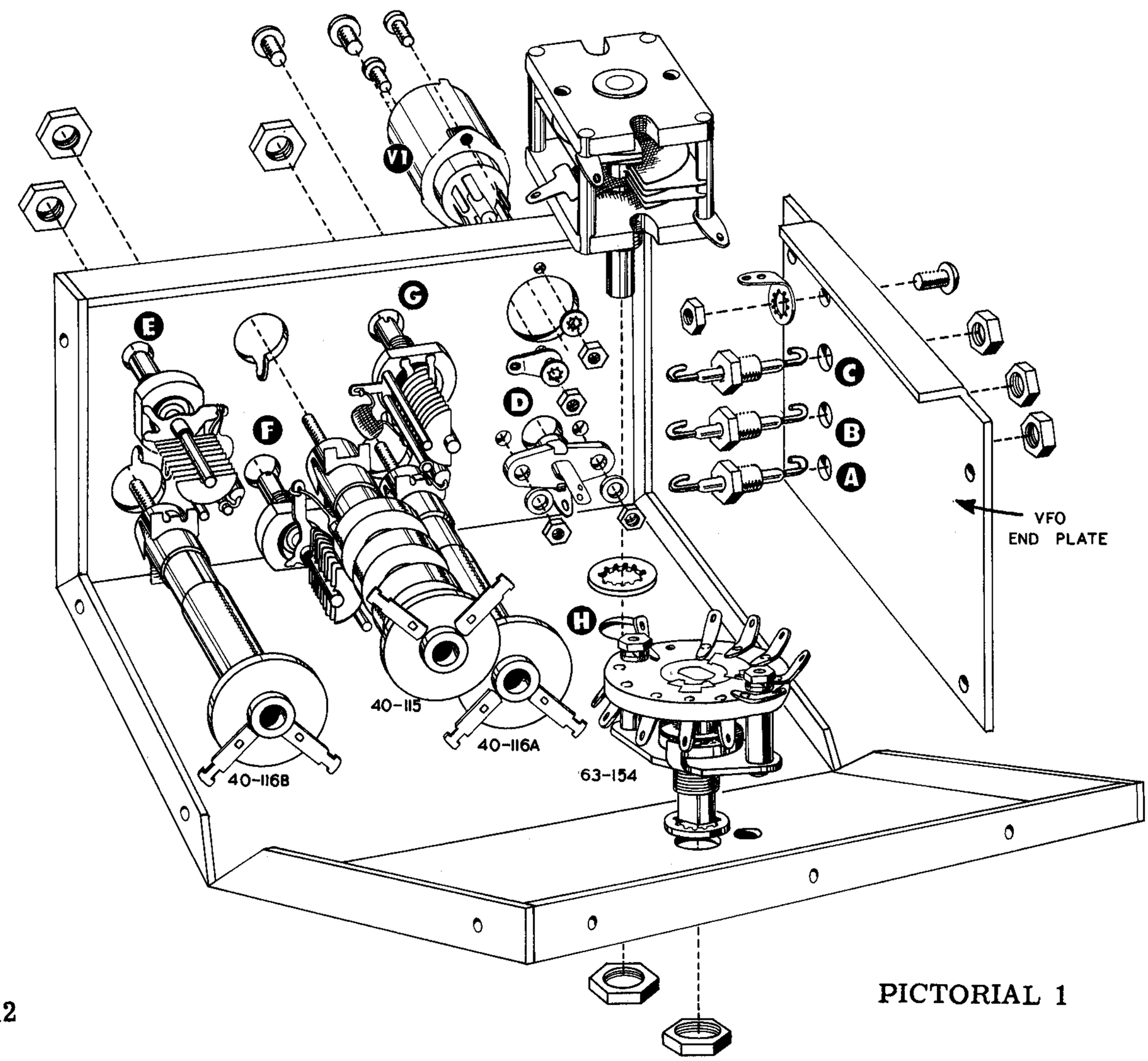

PICTORIAL 1

( ) Mount a 7-pin miniature ceramic shield socket in the hole at location V1 and orient the pins as shown, pin 7 toward the flange. Place a small solder lug on the mounting screw away from the flange and position as shown. Use #3-48 x 1/4" pan head machine screws with lockwashers under the nuts.

( ) Mount a phono jack on the inside of the sub-chassis in the hole at location D directly beneath the tube socket. Orient the jack so the center pin connection (lug #1) is nearest the tube socket. Use #6-32 x 1/4" RHMS with lockwashers under the nuts.

( ) Locate the VFO sub-chassis end plate. Mount a .001 mf feed-through capacitor in each of the three larger in-line holes A, B, and C. Mount with the nuts on the side away from the flange with the hooked lugs oriented as shown.

( ) Mount a #6 solder lug with #6-32 x 1/4" hardware in the small hole on the end plate, as shown, with the lug on the flanged side and pointing toward the flange. Bend lug for clearance. Set end plate aside temporarily.

NOTE: Looking at the bottom of any tube socket, pin 1 is at the clockwise side of the gap (on miniature sockets) or the key (on octal sockets) and, moving clockwise, the pins are numbered in ascending order.

( ) Referring to Figure 1, cut one lead of a 22 K ohm (red-red-orange) 1/2 watt resistor to 1/2" and connect to V1-1 (NS). Leave the other end free.

( ) Pass one end of a short length of #20 bare wire through V1-3 (NS) and then connect to V1-2 (NS). Connect the other end to the small solder lug on the tube socket mounting screw (NS). Now solder V1-3 (S1).

( ) Connect a 510 mmf (green-brown-brown) mica capacitor from V1-7 (NS) to the small solder lug (S2) on the socket. Route capacitor around socket and position against the chassis.

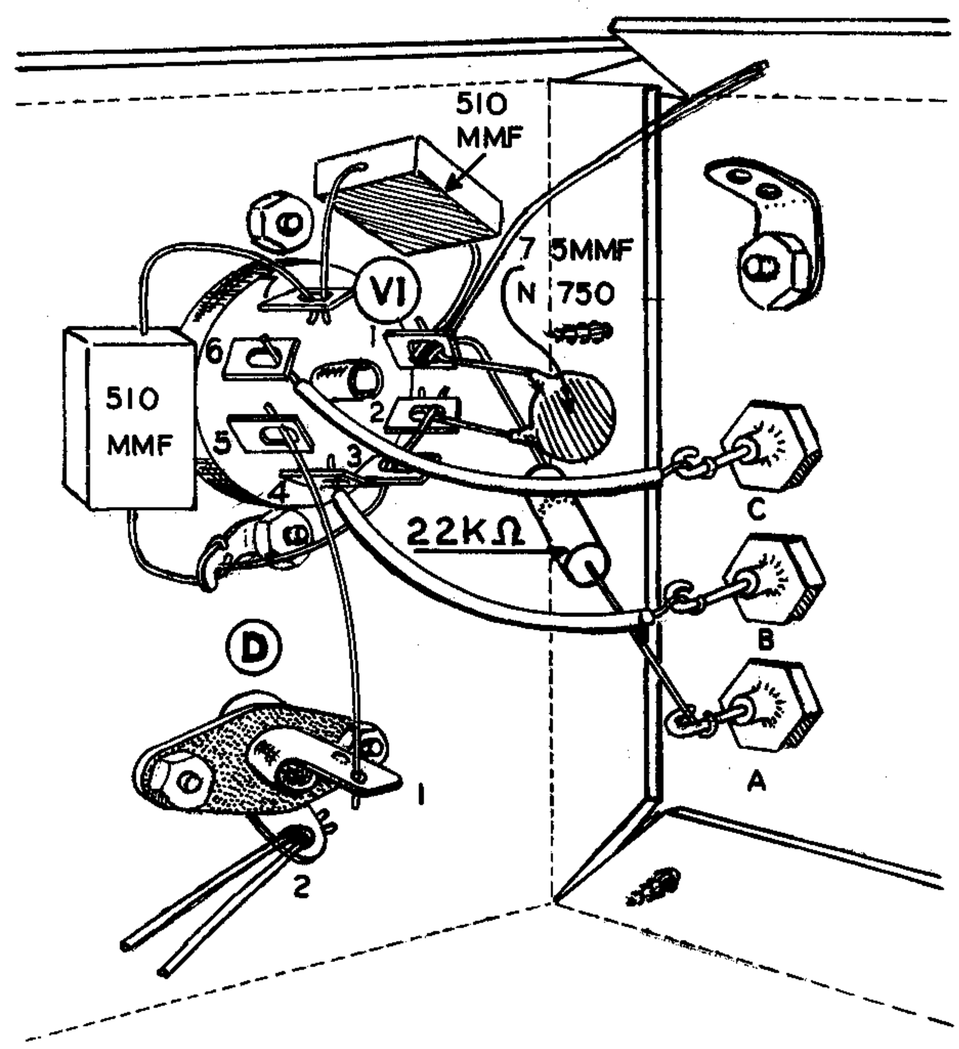

Figure 1

( ) Connect a 510 mmf (green-brown-brown) mica capacitor from V1-1 (NS) to V1-7 (NS). Position capacitor against chassis, as shown, checking to make sure the bare leads do not touch the socket mounting screw or the end plate sheet metal screw.

( ) Trim both leads of a 75 mmf N750 capacitor to 3/4" and connect from V1-1 (NS) to V1-2 (S2). Use only about 1/4" of the leads for the connections and leave the capacitor supported on 1/2" leads directly away from the tube socket as shown. Leave room for the near cover plate sheet metal screw.

( ) Connect one end of a 4" length of #20 bare wire to V1-1 (S4). Leave the other end free temporarily.

( ) Now assemble the end plate to the VFO sub-chassis with four #6 sheet metal screws. The end plate fits on the tube socket end of the sub-chassis with the flanged edge between and flush with the flanges on the sub-chassis.

( ) Connect the free end of the 22 K ohm resistor from V1-1 to feed-through capacitor A (S1). Trim off excess wire.

( ) Using orange hookup wire, connect V1-4 (S1) to feed-through capacitor B (S1).

( ) Connect one end of a 5" length and one end of a 2 1/2" length of #20 bare wire to terminal D-2 of the phono jack (S2). Leave the other ends free temporarily.

( ) Connect a #20 bare wire from terminal D-1 (S1) of the phono jack to V1-5 (S1).

( ) Using orange hookup wire, connect the inside lug of feed-through capacitor C (S1) to V1-6 (S1).

( ) Connect a 1.1 mh RFC from V1-7 (S3) to the solder lug on the sub-chassis end plate (S1).

Recheck the previous steps making sure no short circuits, wiring errors, or cold solder joints exist.

( ) Locate the three small 15 mmf midget variable capacitors. On one capacitor connect a 68 mmf small mica capacitor between the stator solder lug 1 on the ceramic end of the capacitor (S1) and the rotor solder lug 2 (NS). See Figure 2B.

( ) In a similar manner, on a second 15 mmf midget variable capacitor, connect a 56 mmf small mica capacitor between the stator lug 1 (S1) and the rotor lug 2 (NS). See Figure 2A.

( ) Again, in a similar manner, connect a 24 mmf small mica capacitor between the stator lug 1 (S1) and the rotor lug 2 (NS) on the remaining 15 mmf midget variable capacitor. See Figure 2A.

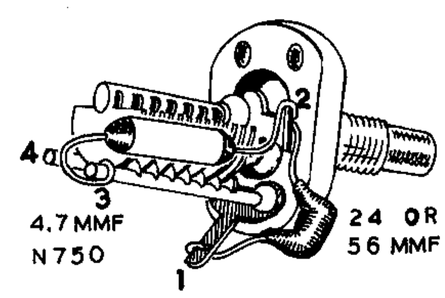

Figure 2A

( ) Keeping leads short, on the 15 mmf variable capacitor with the 56 mmf capacitor previously installed, connect a 4.7 mmf N750 capacitor between the projecting end of the stator bar 3 (S1) and the rotor lug 2 (NS). See Figure 2A. Use care in soldering to the stator bar to prevent solder from running into the capacitor plates.

( ) In the same manner, on the 15 mmf variable capacitor with the 24 mmf capacitor previously installed, connect a 4.7 mmf N750 capacitor between the projecting end of the stator bar 3 (S1) and the rotor lug 2 (NS). See Figure 2A.

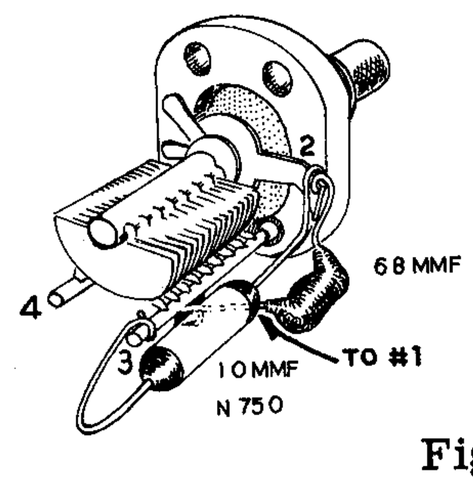

Figure 2B

( ) On the remaining 15 mmf variable capacitor, the one with the 68 mmf capacitor previously installed, connect a 10 mmf N750 capacitor between the projecting end of the stator bar 3 (S1) and the rotor lug 2 (NS). Notice that about 1/4" extra lead length is used on this N750 capacitor compared to the two just mounted. See Figure 2B.

( ) Referring back to Pictorial 1, mount the 15 mmf variable, 68 mmf mica, and 10 mmf N750 capacitor combination in the 7/32" hole at location E on the sub-chassis top. Orient the variable capacitor as shown in Pictorial 1, stator bars down.

( ) Mount the 15 mmf variable, 56 mmf mica, and 4.7 mmf N750 capacitor combination in the 7/32" hole at location F on the sub-chassis top. Orient the capacitor as shown, stator bars to the right.

( ) Mount the remaining 15 mmf variable, 24 mmf mica, and 4.7 mmf N750 capacitor in the 7/32" hole at location G referring, as in the above steps, to Pictorial 1. Orient the capacitor as shown, stator bars to the left.

( ) Referring to Figure 3, connect the 5" #20 bare wire from lug D-2 of the phono jack to the rotor lug G2 (S3) to the rotor lug F2 (S3) to the rotor lug E2 (S3). Due to the limited space, a solid "tacking" type of solder connection is suggested. Route wire to clear the adjacent coil mounting holes.

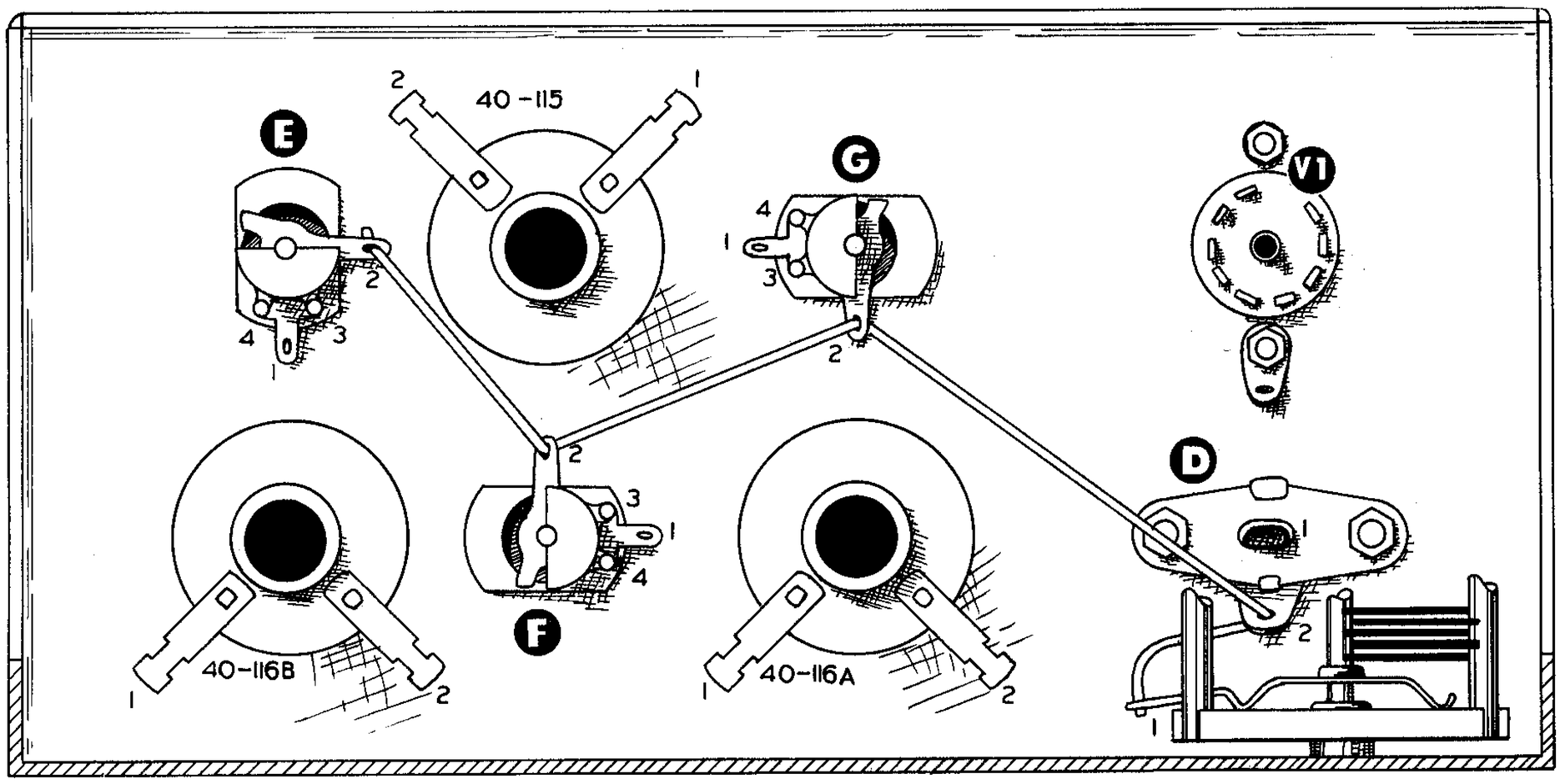

Figure 3

( ) Connect one end of a 3" length of #20 bare wire to the stator bar F4 (S1). Leave the other end free temporarily.

( ) Locate the roll of insulating tape and cut several pieces each 1 3/4" in length.

( ) Referring to Pictorial 2, place the insulating tapes on the feed-through capacitor end of the sub-chassis on the inside as shown. Position one end of the first piece just under the feed-through capacitors with the edge along the flange end of the sub-chassis closed side. Press firmly in place. Place the other pieces of tape in place so as to cover the approximate 1 3/4" x 1 3/4" area shown.

( ) Mount the differential variable capacitor in the hole at location H in the closed side of the sub-chassis, as shown. Position the capacitor so that the rotor solder lug faces into the center of the sub-chassis compartment. Before mounting, bend down the stator solder lugs on the side of the capacitor that is adjacent to the tube and phono sockets so they lay along the stator bars. Use a 3/8" lockwasher on the inside of the chassis and a 3/8" nut on the outside. See Pictorial 1.

( ) Connect the remaining short bare #20 wire from lug D-2 of the phono jack to lug 1 of the differential variable capacitor (S1).

( ) Mount a 40 meter VFO coil in the large hole next to the phono jack on the sub-chassis top. This is one of the large slug-tuned single layer wound coils marked 40-116. Make sure the locating lug is inserted in the locating slot next to the large hole. Note that this coil will now be designated 40-116A.

( ) In a similar manner, mount the remaining 40 meter VFO coil in the large hole near the left edge of the sub-chassis top as shown. Designate this coil 40-116 B.

( ) Again, in a similar manner, mount the 160 meter VFO coil in the large hole near the flanged edge of the sub-chassis top. This is the large slug-tuned coil with the three section winding marked 40-115.

( ) Locate the VFO band switch. This is the small rotary switch with contact lugs on both sides of its single deck and marked 63-154. Orient the switch so the terminal arrangement is the same as in Pictorial 1. Notice that, starting with the lug marked in the Pictorial as B1, the lugs are numbered in ascending numerical order in a clockwise direction, the lugs on the back of the deck being prefixed with a B and those on the front with an A.

( ) Before mounting the switch, solder one end of a #20 bare wire 3" long to lug A12 (S-1). Leave the other end free temporarily.

( ) Referring to Pictorial 1, mount the switch inside the sub-chassis in the 3/8" hole on the bottom of the sub-chassis. Orient the switch as shown with B1 and A12 toward the sub-chassis top and the locating lug in its mating hole. Use a 3/8" lockwasher on the inside and a 3/8" nut on the outside. Do not tighten mounting nut securely at this time.

NOTE: Make the following connections "point-to-point" as much as possible, as shown in Pictorial 2.

( ) Connect a #20 bare wire from lug 2 of the differential variable capacitor (S1) through B1 (NS) to B4 (S1). Make sure the wire does not touch B3. Now solder B1 (S1).

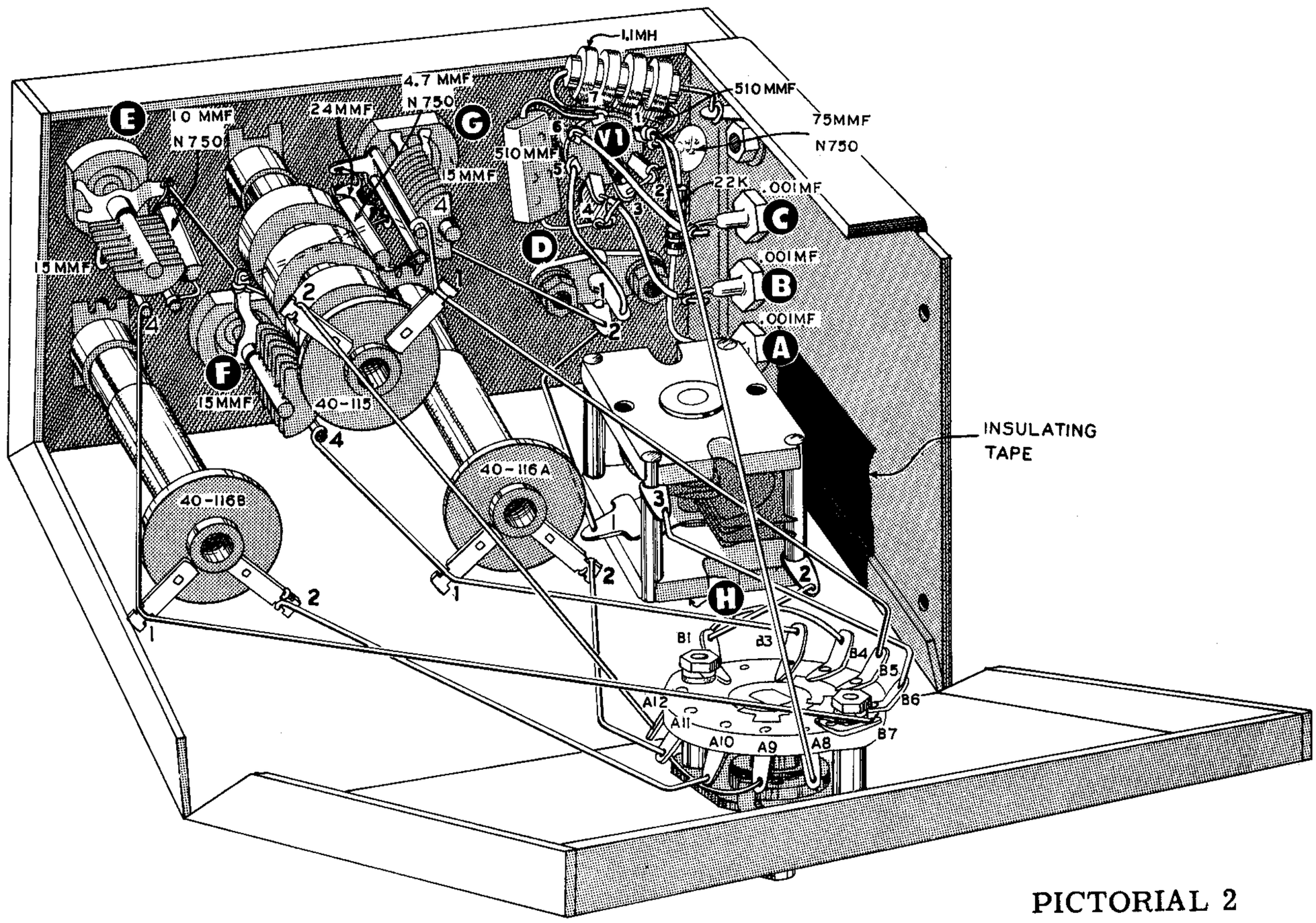

PICTORIAL 2

( ) Connect a #20 bare wire from lug 3 of the differential variable capacitor (S1) to B6 (S1).

( ) Connect a #20 bare wire from lug 2 of coil 40-116A (S1) through A 11 (NS) to A9 (S1). Make sure the bare wire does not touch A 10. Now solder A 11 (S1).

( ) Connect the bare wire from the stator bar F4 to lug 1 of coil 40-116A (S1) and then to B3 (S1).

( ) Connect the bare wire from lug A12 to lug 2 of coil 40-115 (S1).

( ) Connect the bare wire from V1-1 to lug A8 (S1).

( ) Connect a #20 bare wire from stator bar G4 (S1) to lug 1 of coil 40-115 (S1) and then to B5 (S1).

( ) Connect a #20 bare wire from lug 2 of the coil 40-116B (S1) to A10 (S1).

( ) Connect a #20 bare wire from stator bar E4 (S1) to lug 1 of the coil 40-116B (S1), then to B7 (S1).

This completes the assembly and wiring of the VFO sub-chassis. Now recheck your work to this point. Dress all wires to conform with the pictorials and check for short circuits, wiring errors, and poor solder joints.

( ) Locate the VFO sub-chassis cover plate and temporarily secure in place with three or four #6 sheet metal screws for protective purposes. Set the completed VFO aside temporarily.

TOP PLATE ASSEMBLY & PRE-WIRING

( ) Locate the chassis base top plate and orient as shown in Pictorial 3. The view is of the bottom side of the plate.

( ) Mount a 9 pin miniature ceramic tube socket and tube shield base at location V2. See Figure 4 for mounting details. Orient the pins as shown. Use #3-48 x 1/4" PHMS with lockwashers under the nuts.

( ) In the same manner, mount a 9 pin miniature ceramic tube socket at location V3. Orientation and mounting details are the same as in the preceding step.

( ) Mount the crystal socket at location BF. Use the #4-40 x 1/2" RHMS and the small #4-40 nut. No lockwasher is used under the nut.

( ) Mount a 4 lug, #2 ground, terminal strip at location BG and orient as shown. Use #6-32 x 1/4" hardware.

( ) Mount a 7 pin miniature socket at location V4. Orient pins as shown and use #3-48 x 1/4" PHMS and nuts with lockwashers.

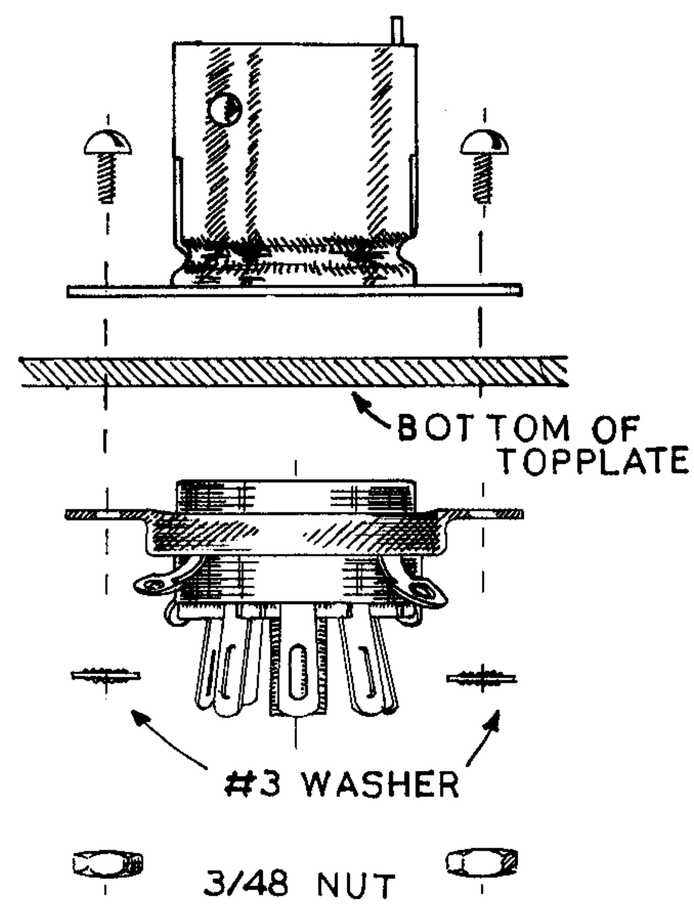

Figure 4

( ) Mount a 9 pin miniature tube shield socket at location V7. Orient pins as shown and use #3-48 x 1/4" PHMS with lockwashers under the nuts. Under the nut and lockwasher of both mounting screws, place a small solder lug and bend to the positions shown.

( ) Mount a 9 pin miniature tube socket at location V8. Orient pins as shown and use #3-48 x 1/4" PHMS with lockwashers under the nuts.

( ) In the same manner as in the preceding step, mount a 9 pin miniature tube socket at location V9.

( ) Mount a 7 pin miniature tube socket at location V10. Orient pins as shown and use #3-48 x 1/4" PHMS with lockwashers under the nuts.

( ) Mount a ceramic octal saddle socket at location V12. Orient keyway as shown and use #6-32 x 1/4" RHMS and use lockwashers under the nuts.

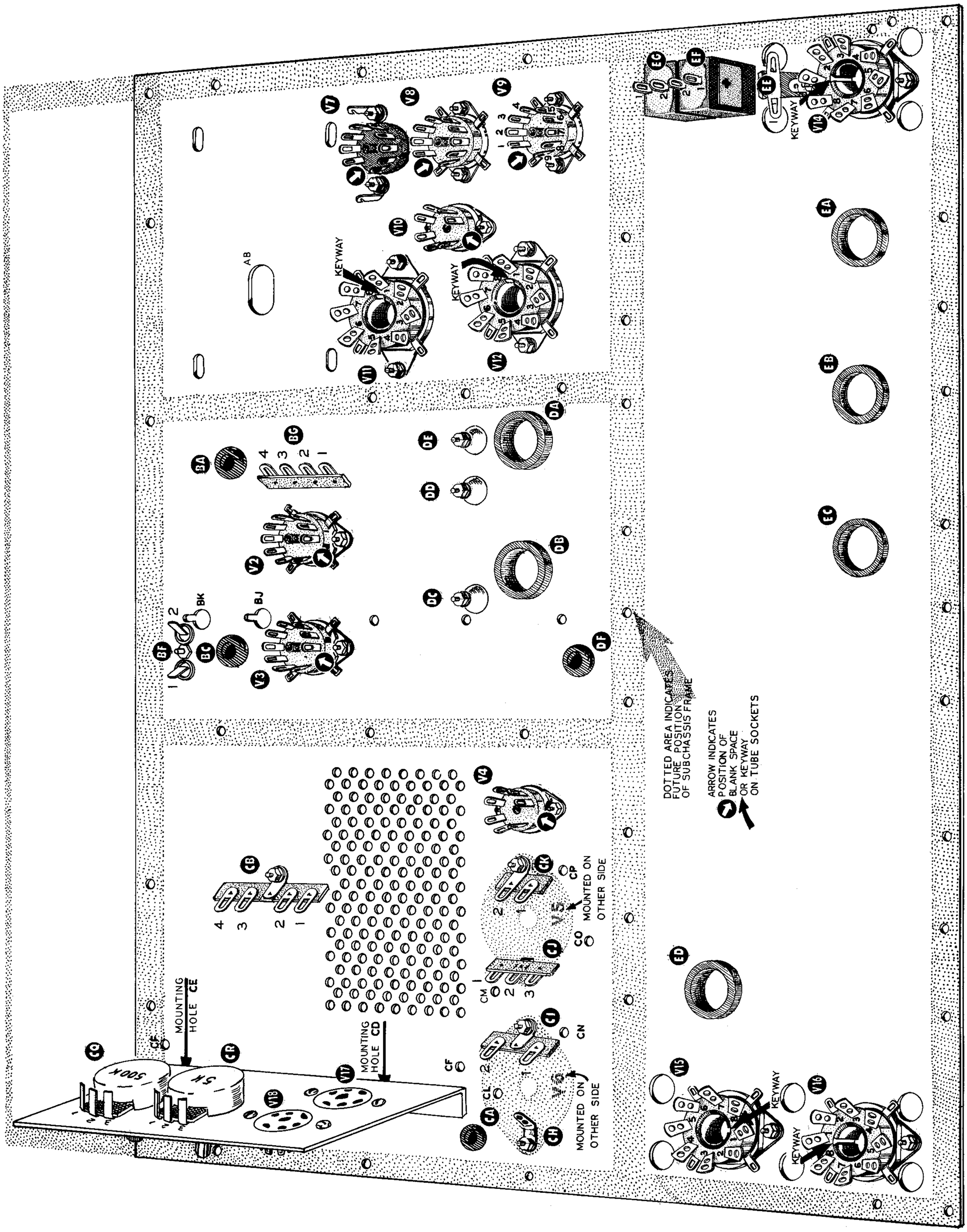
V7
V8
V9
V10
V11
V12
V13
V14
V15
V16
V17
V18
V2
V3
V4
KEYWAY
AB
BA
BB
BC
BD
BE
BF
BJ
BK
DA
DB
DC
DD
DE
DF
EA
EB
EC
ED
EE
EF
EG
CA
CB
CC
CD
CE
CF
CG
CH
CJ
CK
CL
CM
CN
CO
CP
CQ
CR
500K
5K
MOUNTING HOLE CE
MOUNTING HOLE CD
MOUNTED ON OTHER SIDE
DOTTED AREA INDICATES FUTURE POSITION OF SUBCHASSIS FRAME
ARROW INDICATES POSITION OF BLANK SPACE OR KEYWAY ON TUBE SOCKETS

PICTORIAL 3

( ) Mount a ceramic octal saddle socket at location V11. Orient keyway as shown and use #6-32 x 1/4" RHMS. Use lockwashers under the nuts.

( ) Place a #6-32 x 3/8" RHMS through dimpled hole DE from the top side of the plate. Place a lockwasher and nut on the screw from the bottom side and tighten securely.

( ) As in the preceding step, mount a #6-32 x 3/8" RHMS in dimpled hole DC.

( ) As above, mount a third #6-32 x 3/8" RHMS in dimpled hole DD.

( ) Mount a selenium rectifier at location EF and at location EG. Orient as shown with the two negative lugs together. Secure with #6 nuts and lockwashers.

( ) Mount a ceramic octal saddle socket at location V14. Orient the keyway as shown and use #6-32 x 1/4" RHMS with lockwashers under the nuts. Mount a one lug (no ground) terminal strip under the lockwasher and nut nearest V13 and orient as shown. Designate this strip as EE.

( ) Mount a ceramic octal saddle socket at location V15. Orient the keyway as shown and use #6-32 x 1/4" RHMS with lockwashers under the nuts.

( ) Mount a ceramic octal saddle socket at location V16 as in the preceding step, observing keyway orientation.

( ) Insert 3/8" rubber grommets in holes BA, BC, and DF.

( ) Insert 3/4" rubber grommets in holes EA, EB, EC, ED, DA, and DB.

( ) Insert a 5/16" rubber grommet in hole CA.

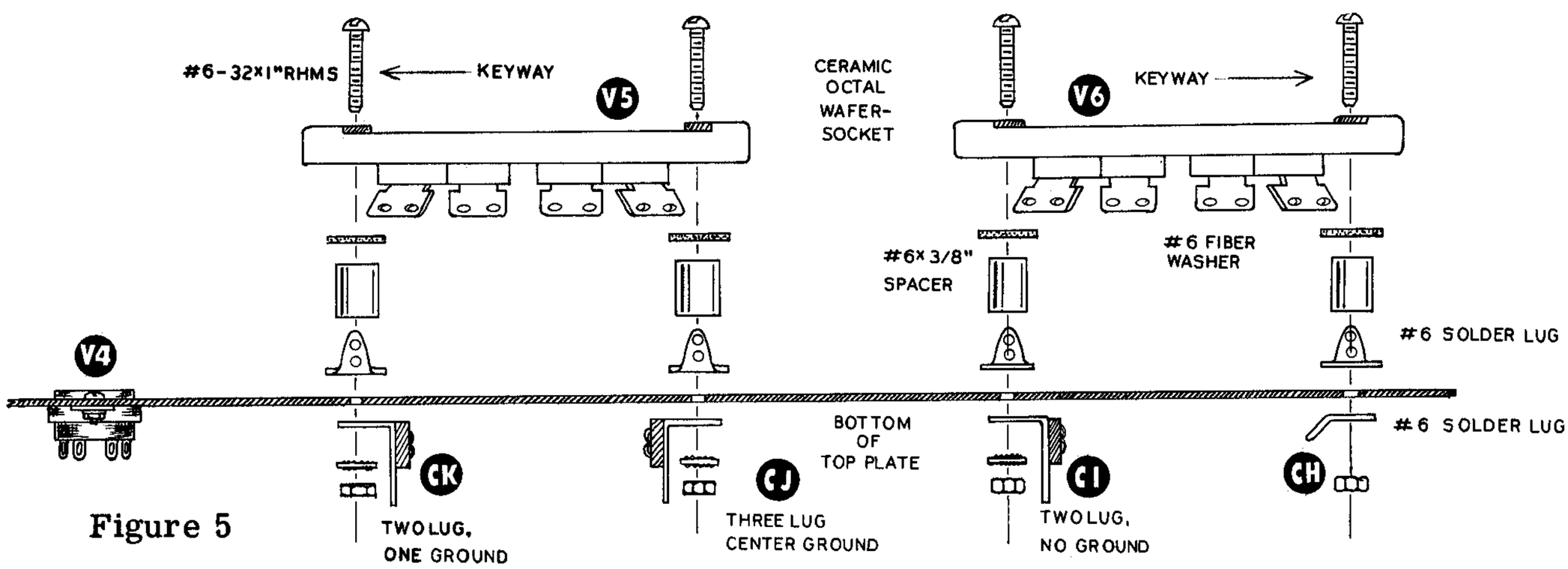

Figure 5

( ) Mount a ceramic octal wafer socket on the top side of the chassis top plate at location V5, using 3/8" #6 spacers and #6-32 x 1" RHMS, through holes CK and CJ. Place a #6 fiber washer on the screw at the socket end of each spacer, then place a #6 solder lug on the screw at the chassis end of each spacer. See Figure 5 for mounting details. Orient socket so keyway faces toward V4. Under the #6 mounting nut at CK on the bottom side of the plate, place a 2 lug (one ground) terminal strip and orient as shown. Use a lockwasher. Place a 3 lug (center ground) terminal strip under the lockwasher and nut of the mounting screw at CJ and position as shown.

( ) In a similar manner, mount a ceramic octal wafer socket on the top side of the chassis top plate at location V6 but orient with the keyway away from V4. At mounting screw CI on the bottom side of the top plate mount a 2 lug (no ground) terminal strip and orient as shown Under the nut at CH, place a #6 solder lug and position as shown. No lockwasher is necessary with these lugs due to the lockwasher feature of the solder lug.

( ) Mount a standoff insulator at location CB. Mount the insulator on the top side of the chassis top plate. Place a 4 lug (no ground) terminal strip and a #6 lockwasher under the head of the bottom mounting screw. Orient the terminal strip as shown and tighten securely. Refer to Figure 6.

( ) Locate the control and tube mounting bracket shown mounted at holes CE and CD. This is the bracket with a flange on one edge only and with two 7 pin socket and two control mounting holes.

( ) Mount a 7 pin miniature tube socket in locations V17 and V18 on the bracket. Use #3-48 x 1/4" PHMS and place lockwashers under the nuts. The sockets mount with the pin connections on the flanged side. Observe that the pin orientation is the same for each socket as shown in Figure 8.

( ) Mount a 5 K screwdriver adjust potentiometer in hole CR nearest the tube sockets. Use a control lockwasher. Mount the control with the three lugs on the side of the bracket opposite the tube pin connections, and orient the control as shown.

( ) Mount a .5 megohm screwdriver adjust potentiometer in hole CQ as in the preceding step.

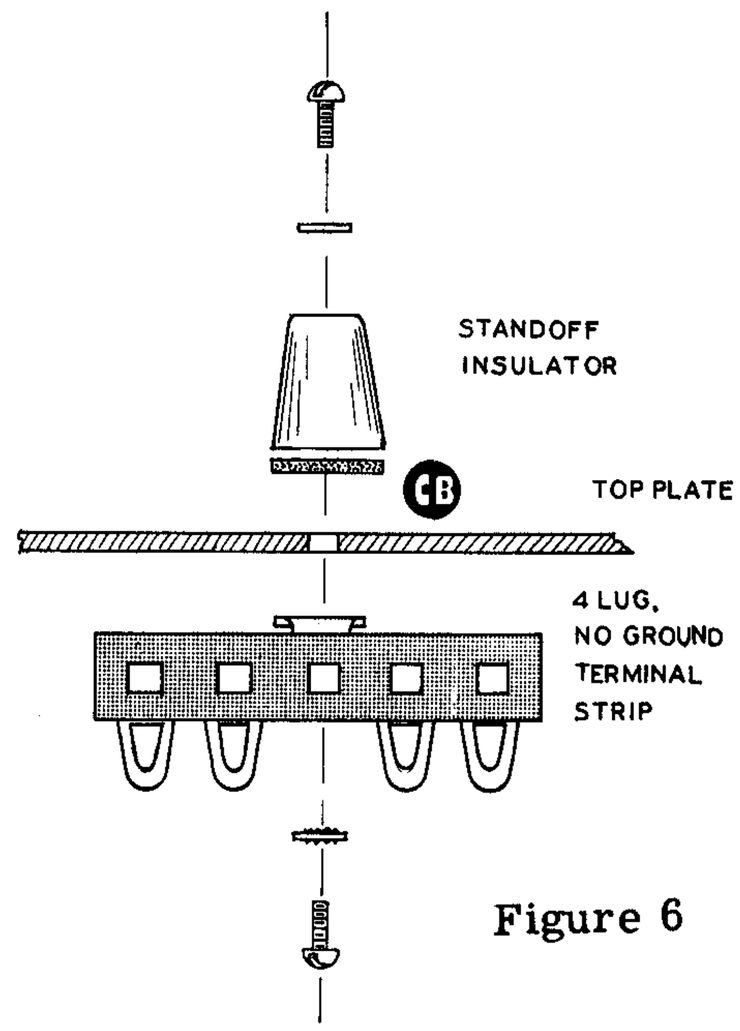

Figure 6

( ) Mount the assembled bracket with #6-32 x 1/4" RHMS in holes CE and CO. The flange faces toward the near edge of the plate. Use lockwashers under the nuts.

( ) Referring to Figure 7, connect one end of a short piece of #16 bare wire to V6-7 (NS) through V6-8 (NS) to the solder lug at CH adjacent to V6-1 (NS). Now solder V6-7 (S1) and V6-8 (S1).

( ) Connect a .005 mf disc capacitor between V6-1 (NS) and the near solder lug.

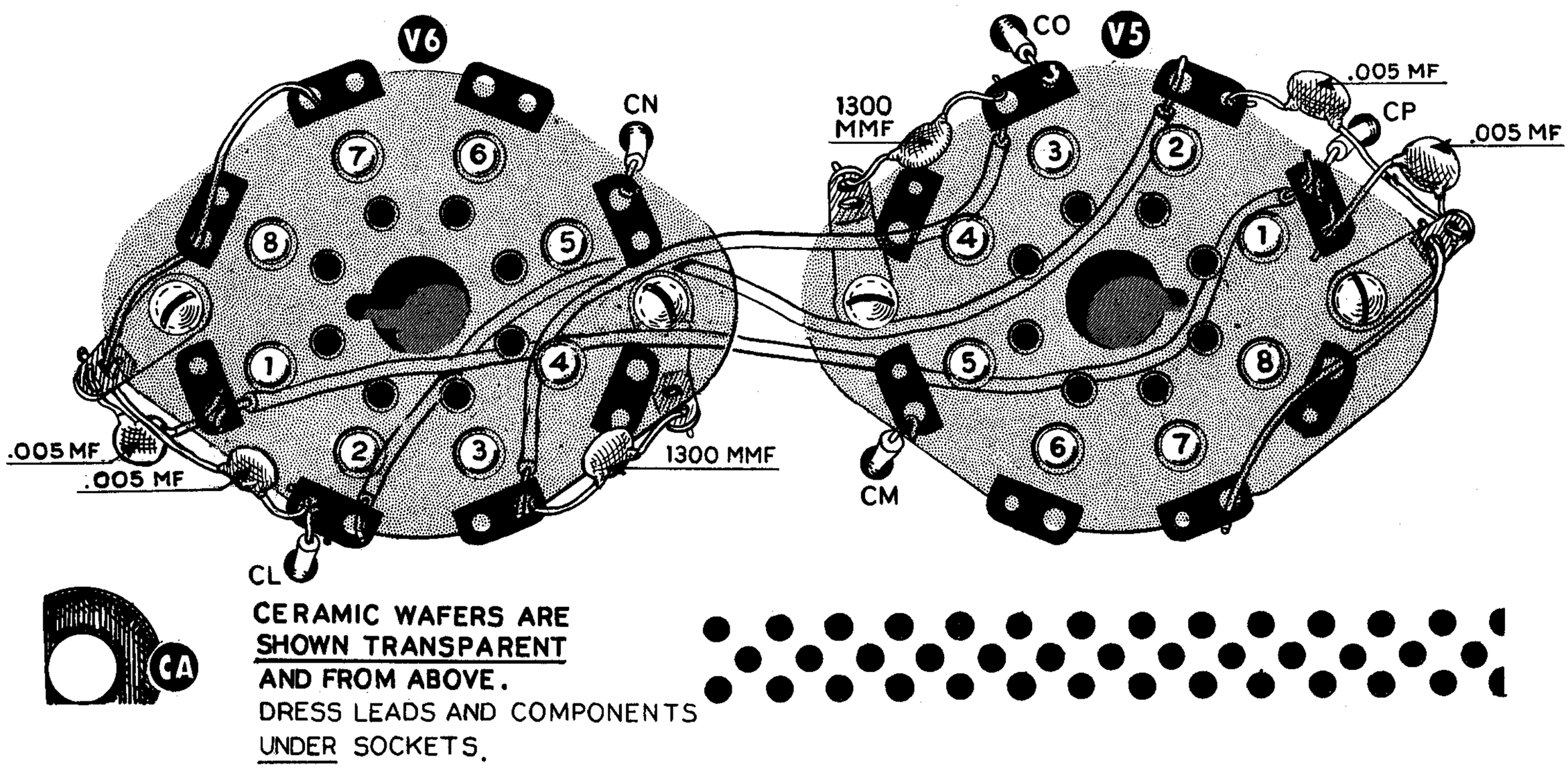

Figure 7

( ) Connect a .005 mf disc capacitor between V6-2 (NS) and the solder lug (S3). Position as shown.

( ) Connect a 1300 mmf disc capacitor between V6-3 (NS) and the solder lug under the spacer at C1 (S1).

( ) Connect one end of a short piece of #16 bare wire to V5-7 (NS) through V5-8 (NS) to the solder lug at CK adjacent to V5-1 (NS). Now solder V5-7 (S1) and V5-8 (S1).

( ) Connect a .005 mfd disc capacitor between V5-1 (NS) and the near solder lug.

( ) Connect a .005 mf disc capacitor between V5-2 (NS) and the solder lug (S3). Position as shown.

( ) Connect a 1300 mmf disc capacitor between V5-3 (NS) and the solder lug under the spacer at CJ (S1).

NOTE: Two sizes of hookup wire are utilized in the construction of this kit. Where #18 hookup wire is specified, use the heavy red insulated wire. #22 hookup wire is used elsewhere.

( ) Using heavy red insulated #18 hookup wire, connect V5-2 (S2) and V6-2 (NS). Run lead under the socket directly between the two pin connections.

( ) Using orange hookup wire, connect V6-3 (S2) and V5-3 (NS). Run lead under the sockets directly between the two pin connections.

( ) Using heavy red insulated #18 hookup wire, connect V6-1 (S2) to V5-1 (NS). Run lead under the sockets directly between the two pin connections.

( ) Insert one end of a 6" length of heavy red insulated #18 hookup wire through hole CL from the bottom side of the chassis top plate and connect to V6-2 (S3). Connect the other end to V4-4 (NS).

( ) Insert one end of a 3 1/2" length of blue hookup wire through CO from the bottom side of the chassis top plate and connect to V5-3 (S3). Place a length of insulated sleeving on the wire at the point where the wire passes through the chassis. Leave the other end free temporarily.

( ) Connect a short piece of heavy red insulated #18 hookup wire through hole CP to V5-1 (S3). Connect the other end to terminal strip CK-1 (NS).

( ) Connect a short length of heavy red insulated #18 hookup wire through hole CN to V6-5 (S1). Connect the other end to lug 1 of terminal strip CI (NS). Make connection as direct as possible.

( ) Connect a short length of heavy red insulated #18 hookup wire through hole CM to V5-5 (S1). Connect the other end to lug 1 of terminal strip C1 (NS). Dress lead so it is self-supported about 1/2" off the chassis.

( ) Referring to Figure 8 and using orange hookup wire, connect a wire between V17-1 (S1) and V18-7 (S1).

( ) Connect one end of a 6 1/2" length of orange hookup wire to V18-5 (S1). Leave the other end free temporarily.

( ) Using orange hookup wire, connect V17-4 (S1) to the solder lug CH (NS).

This completes assembly and pre-wiring of the chassis top plate. Check over your work for errors or short circuits. When checking, pay particular attention to the wiring under the two wafer sockets. Set this assembly aside temporarily.

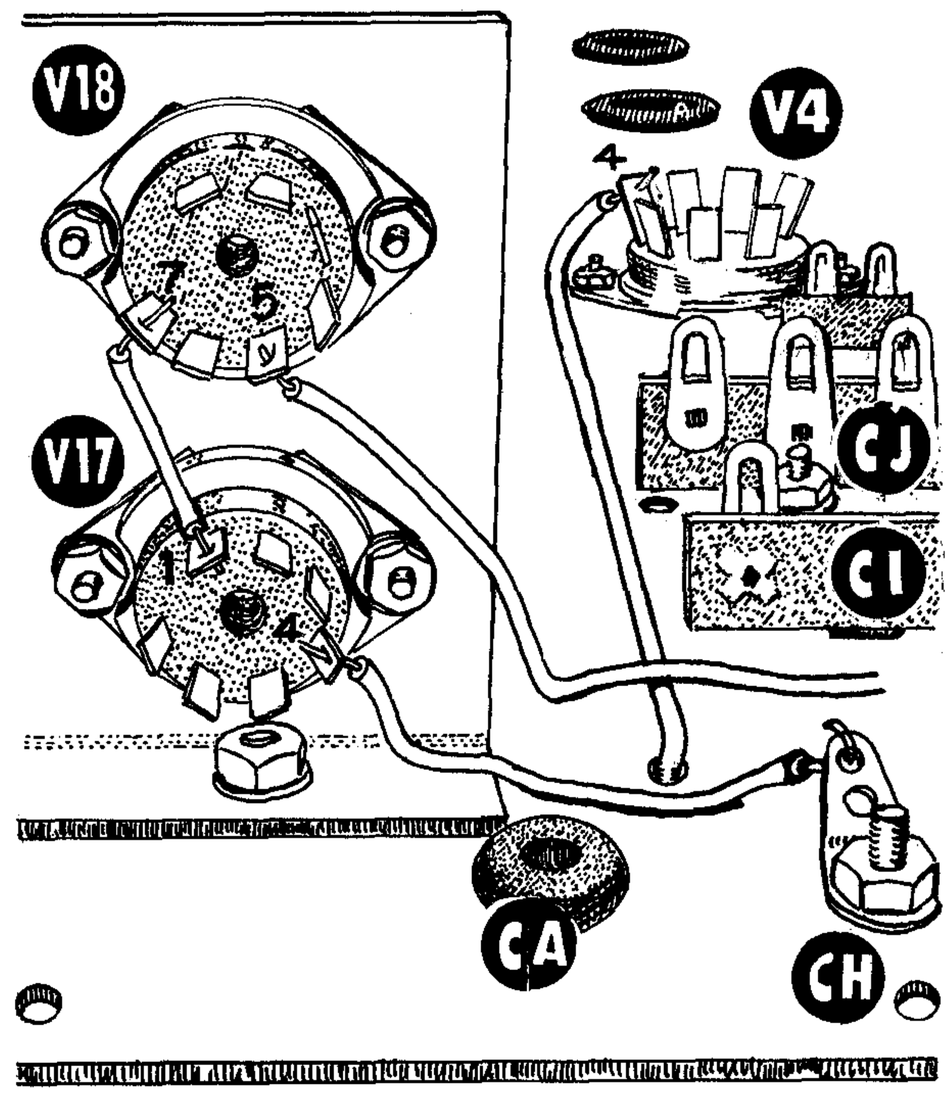

Figure 8

SUB-CHASSIS ASSEMBLY AND CABLE HARNESS INSTALLATION

( ) Locate the large, welded sub-chassis frame and position as shown in Figure 9. The top of the sub-chassis is the side with the holes in the flanges and the front is that side with no flange on the top. Position, bottom side up, with the rear side near you.

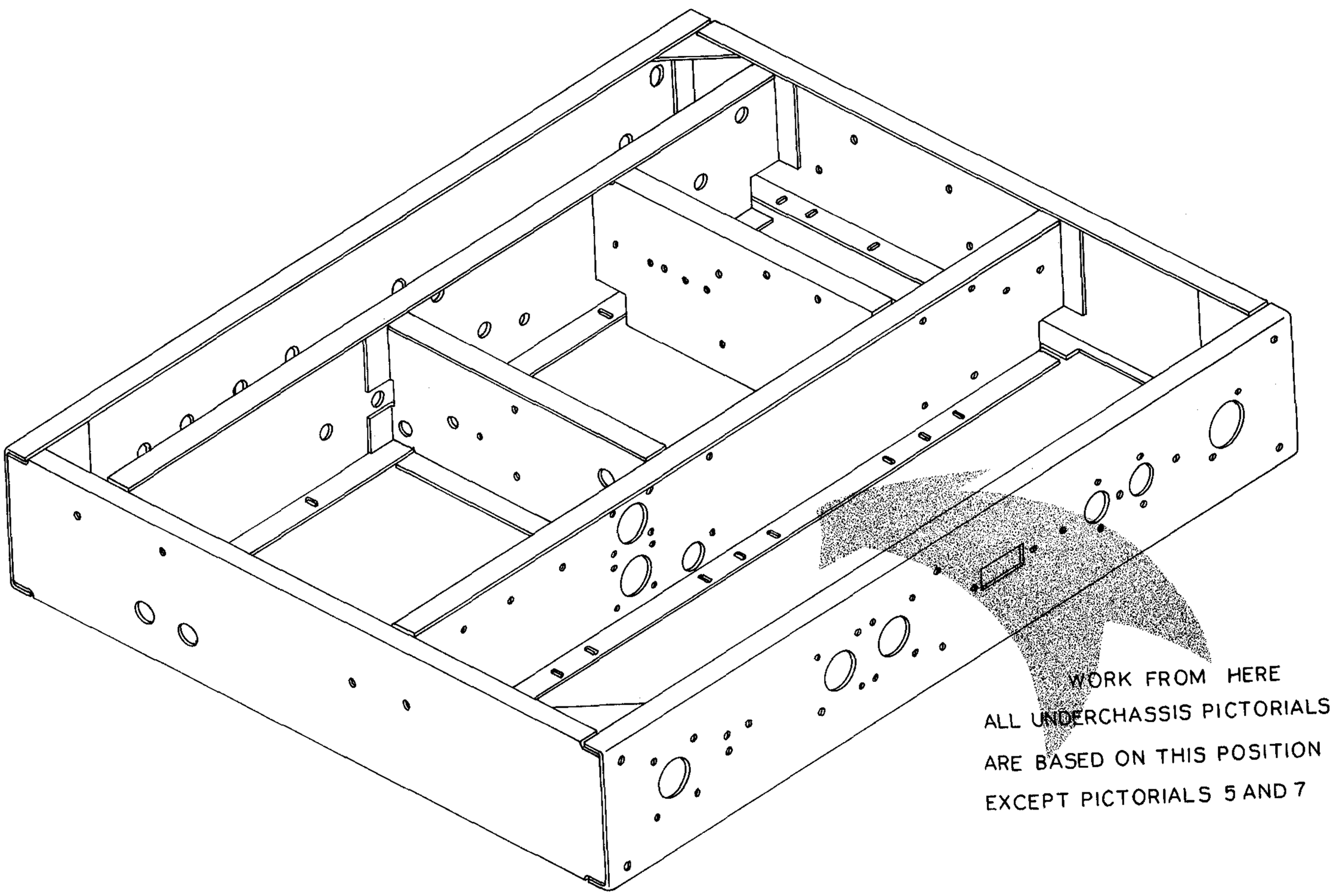

Figure 9

( ) Study the sub-chassis to become familiar with the hole pattern in the various compartments. Each compartment will be treated in a separate pictorial during step-by-step assembly in order to provide several clear pictorials rather than one complex one.

( ) Refer to Pictorial 4 for the following steps. This compartment will contain most of the transmitter power supply wiring.

( ) Mount the mica octal socket at location JA on the rear of the chassis, and position as shown with the keyway nearest the top of the chassis. Use #6-32 x 1/4" RHMS with lockwashers under the nuts. Mount a 5 lug (center ground) terminal strip under the nut and lockwasher of the mounting screw nearest the chassis bottom flange and a 4 lug (one ground) strip similarly on the mounting screw nearest the chassis top flange. Position these terminal strips on slight angles, as shown, and note their designations, JA_t and JA_b.

( ) Locate the two .01 mfd feed-through capacitors. Mount one .01 mfd feed-through capacitor at location JB with the capacitor mounting flange on the inside of the chassis. Use #6-32 x 1/4" RHMS with lockwashers under the nuts. See Figure 10.

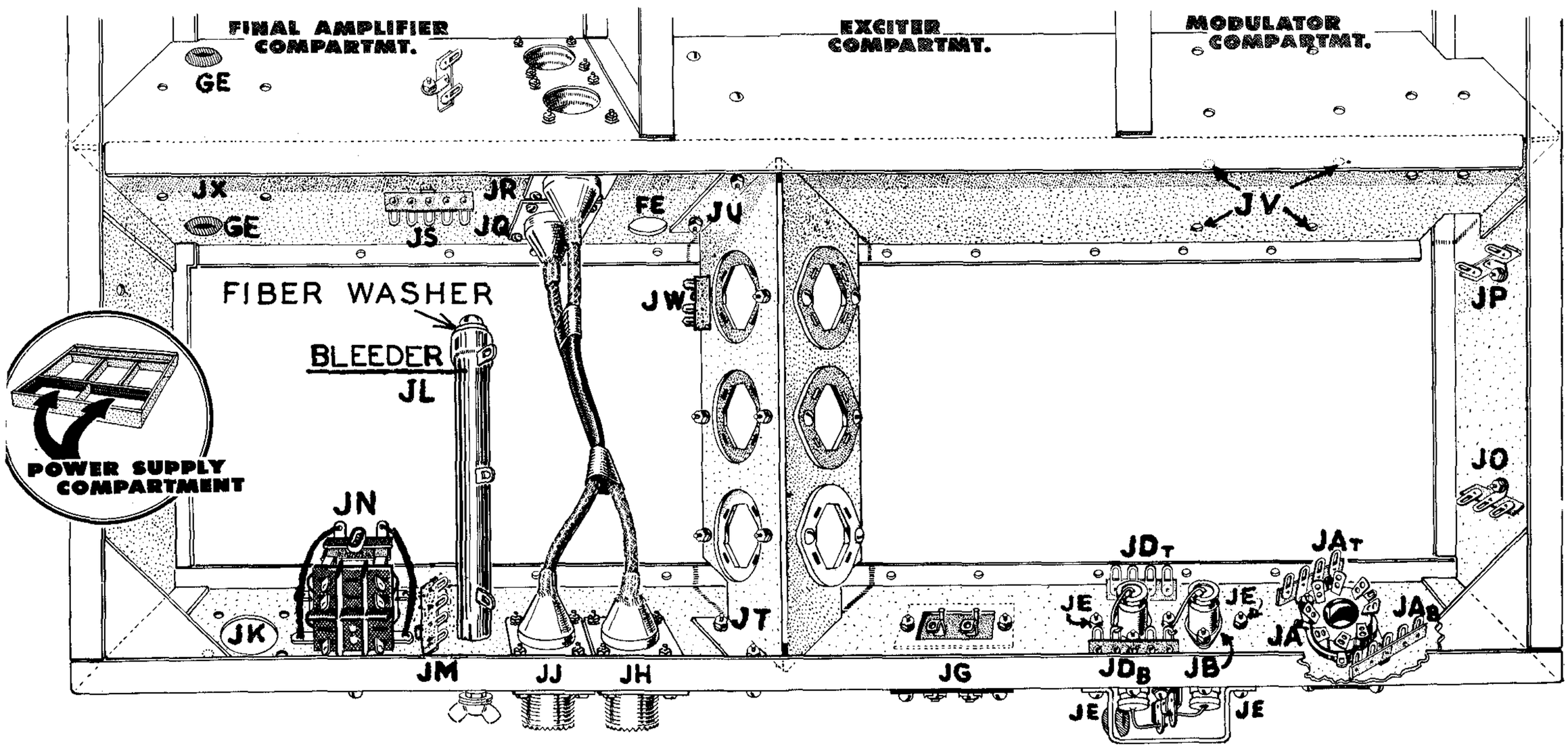

Pictorial 4

( ) Mount the second .01 mfd feed-through capacitor at location JD, as in the preceding step. Under the nut and lockwasher near the chassis bottom flange mount a 4 lug (no ground) terminal strip. In a similar manner, mount a 4 lug terminal strip (one ground) under the mounting hardware near the chassis top flange. Position the terminal strips as shown and note their designations, JD_t and JD_b. See Figure 10.

( ) Refer to Figure 10 for the next four steps. Mount a 2 lug (no ground) terminal strip on the outside of the chassis at location JC. Position as shown and use #6-32 x 1/4" RHMS with a lockwasher under the nut.

( ) Connect the outside chassis lead from feed-through capacitor JB to terminal strip JC-1 (NS). Make connection short; use care to keep bare wire away from the capacitor case.

( ) Connect the outside chassis lead from feed-through capacitor JD to JC-2 (NS). Observe precaution given in preceding step.

( ) Temporarily mount the line cord terminal cover on the outside of the chassis over the exposed capacitor and terminal strip connections. The open side of the cover faces toward the bottom of the chassis. Use #6-32 x 1/4" RHMS with lockwashers through holes JE in the sub-chassis. Mounting the cover temporarily at this time will protect the exposed line terminals from damage during assembly. Insert a 3/8" rubber grommet in the hole on the side of the cover.

( ) Connect the inside chassis lead from feedthrough capacitor JB to terminal strip JD_b-1 (NS).

( ) Connect the inside chassis lead from feedthrough capacitor JD to JD_b-3 (NS).

( ) Mount the 2 lug screw terminal board at location JG. The board mounts on the outside of the chassis with the solder lugs toward the bottom of the chassis. Use #6-32 x 1/4" RHMS with lockwashers. Bend the solder lugs down as shown so they extend into the chassis compartment no farther than the terminal screws.

( ) Mount a 4 lug (one ground) terminal strip at location JM. Use #6-32 x 1/4" RHMS with a lockwasher, and position as shown.

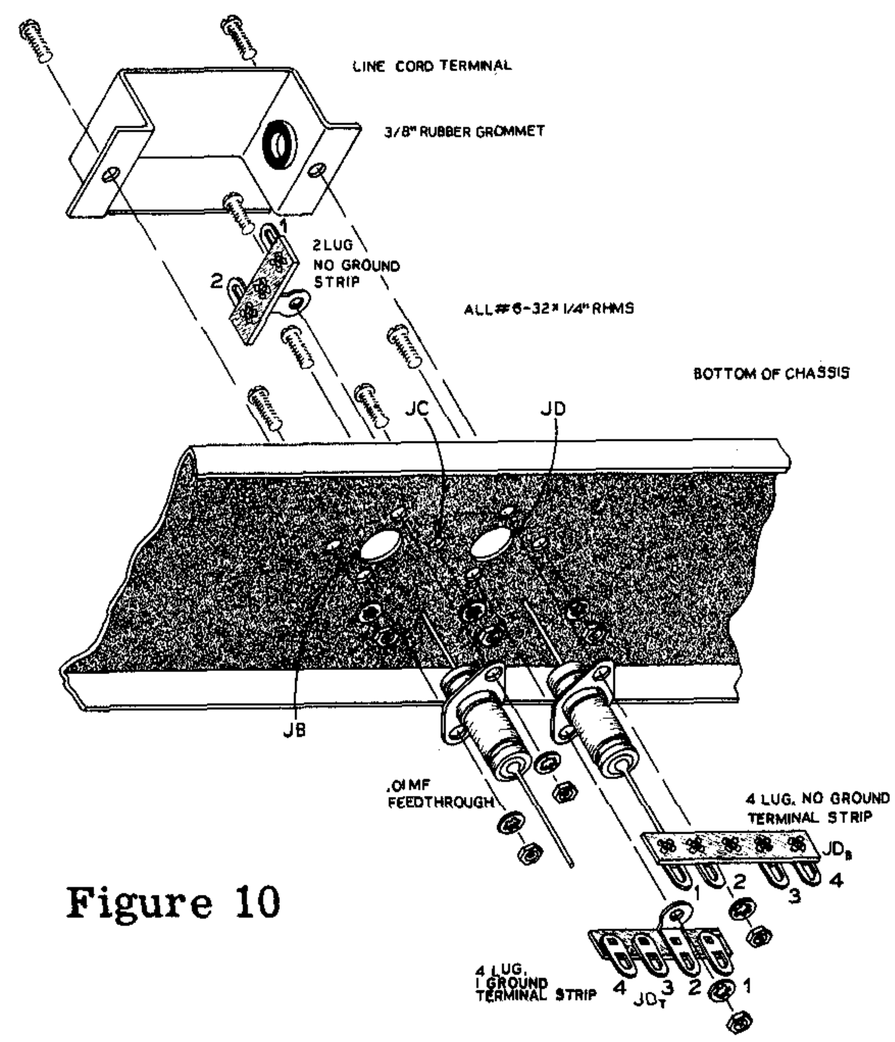

Figure 10

( ) Referring to Pictorial 4, mount the 30 K ohm center-tapped 50 watt bleeder resistor at location JL. Place the long #10-24 bolt through the #10 fibre washer, through the resistor, then place in chassis hole and secure with a #10 lockwasher and nut. Place the wing nut and washers on the outside of the chassis to serve as the transmitter ground connection. Position the resistor, as shown, with the solder lugs toward the chassis bottom.

( ) Mount the DPDT relay at location JN. Use a #6-32 x 3/8" RHMS with a lockwasher under the head. The screw is inserted from the outside of the rear of the chassis. Position the relay with the locating lug inserted in the locating lug hole adjacent to JN.

( ) Mount a 3 lug (one ground) terminal strip at location JO. Use #6-32 x 1/4" RHMS with a lockwasher, under the nut, and position as shown.

( ) Mount a 2 lug (no ground) terminal strip at location JP as in the preceding step.

( ) Mount a 5 lug (one ground) terminal strip at location JS. Use #6-32 x 1/4" RHMS with a lockwasher under the nut. Mount a 2 lug (no ground) terminal strip under the head of the screw on the opposite side of the sub-chassis member. Position the 5 lug strip as shown and position the 2 lug at right angles to it as shown in Pictorials 4 and 7.

( ) Mount coaxial connector shields at location JQ and JR. Use #3-48 PHMS with lockwashers under the nuts. Install the shields only (no connectors) and mount, as shown, on the power supply compartment side of the partition.

( ) Locate the filter capacitor mounting bracket. This is the piece with three large holes in it and flanges on the two ends. Refer to Figure 11. On the notched end, mount a metal capacitor mounting wafer. On the two remaining holes, mount insulated capacitor mounting wafers. The wafers are all mounted on the side away from the flanges with #6-32 x 1/4" RHMS and lockwashers. Place a 3 lug (no ground) terminal strip under the mounting nut and lockwasher at location JW on the end insulating wafer and position as shown.

( ) As shown in Pictorial 4, mount the assembled filter capacitor mounting bracket in the power supply compartment, as shown, at hole locations JT and JU. Mount with the metal wafer near the rear of the sub-chassis and the flanged side toward the bleeder resistor. Use #6-32 x 1/4" RHMS with lock washers and tighten securely.

NOTE: Solder the following connections carefully to avoid melting the center conductor insulation.

( ) Cut a piece of coaxial cable to a length of 7 3/4". As shown in Figure 12A, strip the outer jacket from one end for a distance of 1 1/2", then, pushing back the shield, strip and tin 1/4" of the inner conductor. Strip the outer jacket off the other end of the cable for a distance of 3 3/4". Cut the shield off on this end at a point 1 1/4" from the outer jacket, then strip and tin 1/4" of the inner conductor.

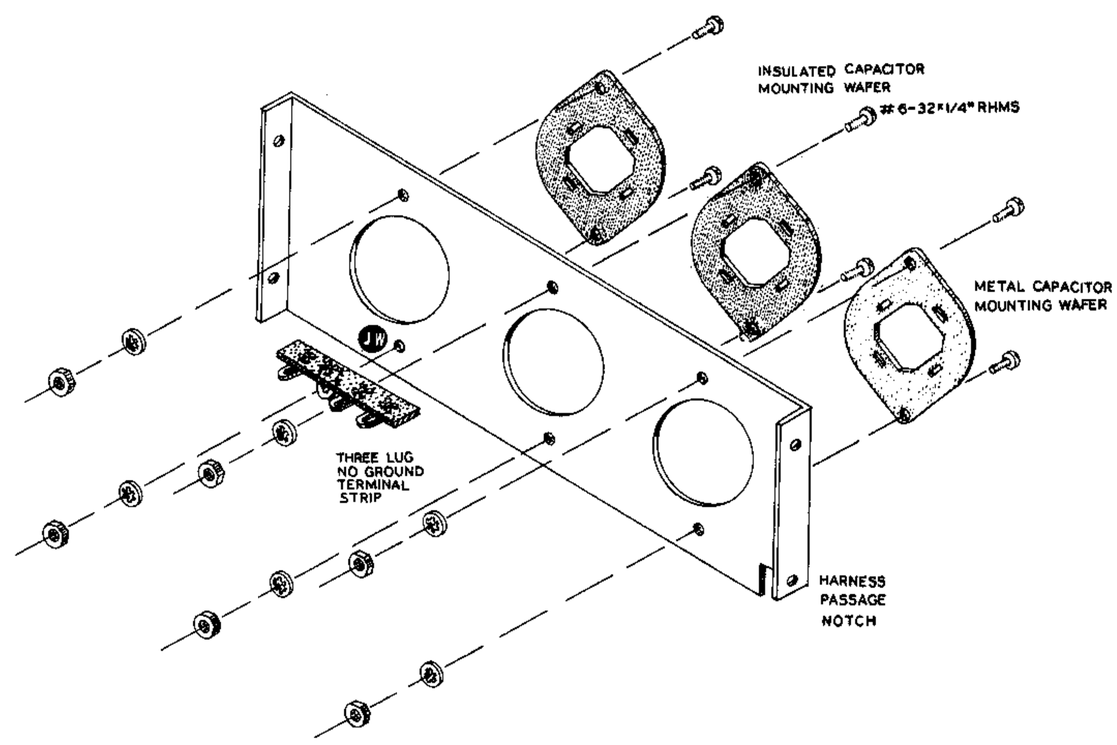

Figure 11

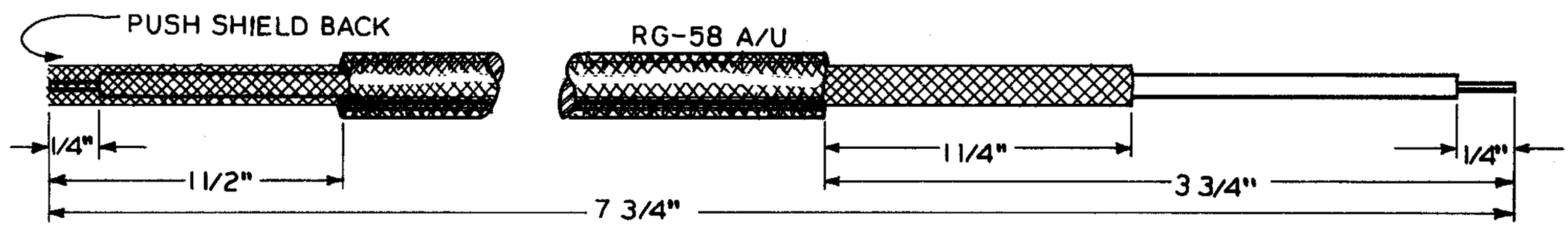

Figure 12A

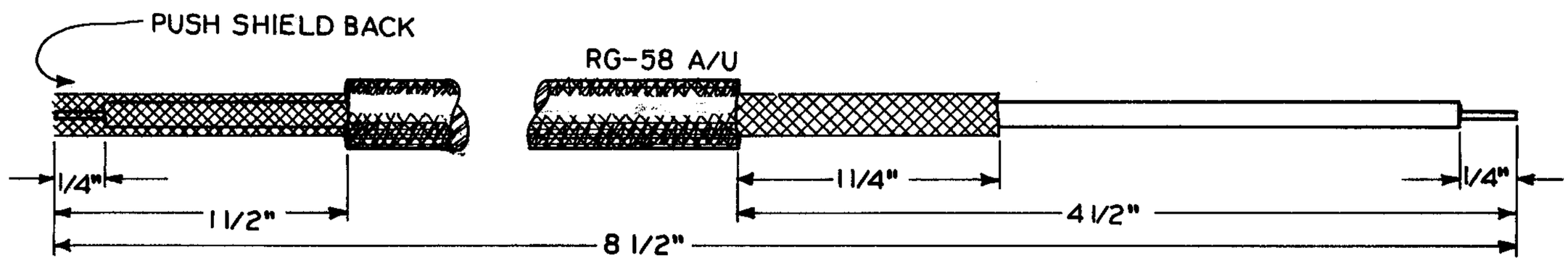

Figure 12B

( ) Install a coaxial receptacle with one #3-48 x 1/4" PHMS temporarily at location JH. Fill the center lug of the connector with solder. Slip a coaxial connector shield, neck first, over the inner conductor of the end stripped to 1 1/2" so the neck slides under the shield. Now solder the inner conductor to the center lug of the connector. Now remove the temporary mounting screw and complete mounting of the connector and shield. Then, solder the braid to the shield neck. Take care not to overheat the shield and cause the inner conductor insulation to melt away.

( ) Slip the inner conductor of the other end of the coaxial cable through the coaxial shield previously installed at JQ. Slip the coaxial cable shield over the neck of shield JQ and solder.

( ) Prepare a second coaxial cable 8 1/2" long. As shown in Figure 12B, strip the outer jacket from one end for a distance of 1 1/2", then, pushing back the shield, strip and tin 1/4" of the inner conductor. Strip the outer jacket off the other end of the cable for a distance of 4 1/2". Cut the shield off on this end at a point 1 1/4" from the outer jacket, then strip and tin 1/4" of the inner conductor. Install this cable as in the two preceding steps from coaxial connector JJ, through coaxial shield JR.

( ) Now tape the two coaxial cables together, as shown in the pictorial, using the insulating tape supplied.

( ) Refer to Pictorial 5 for the following steps. This compartment will contain most of the speech amplifier and modulator stage wiring.

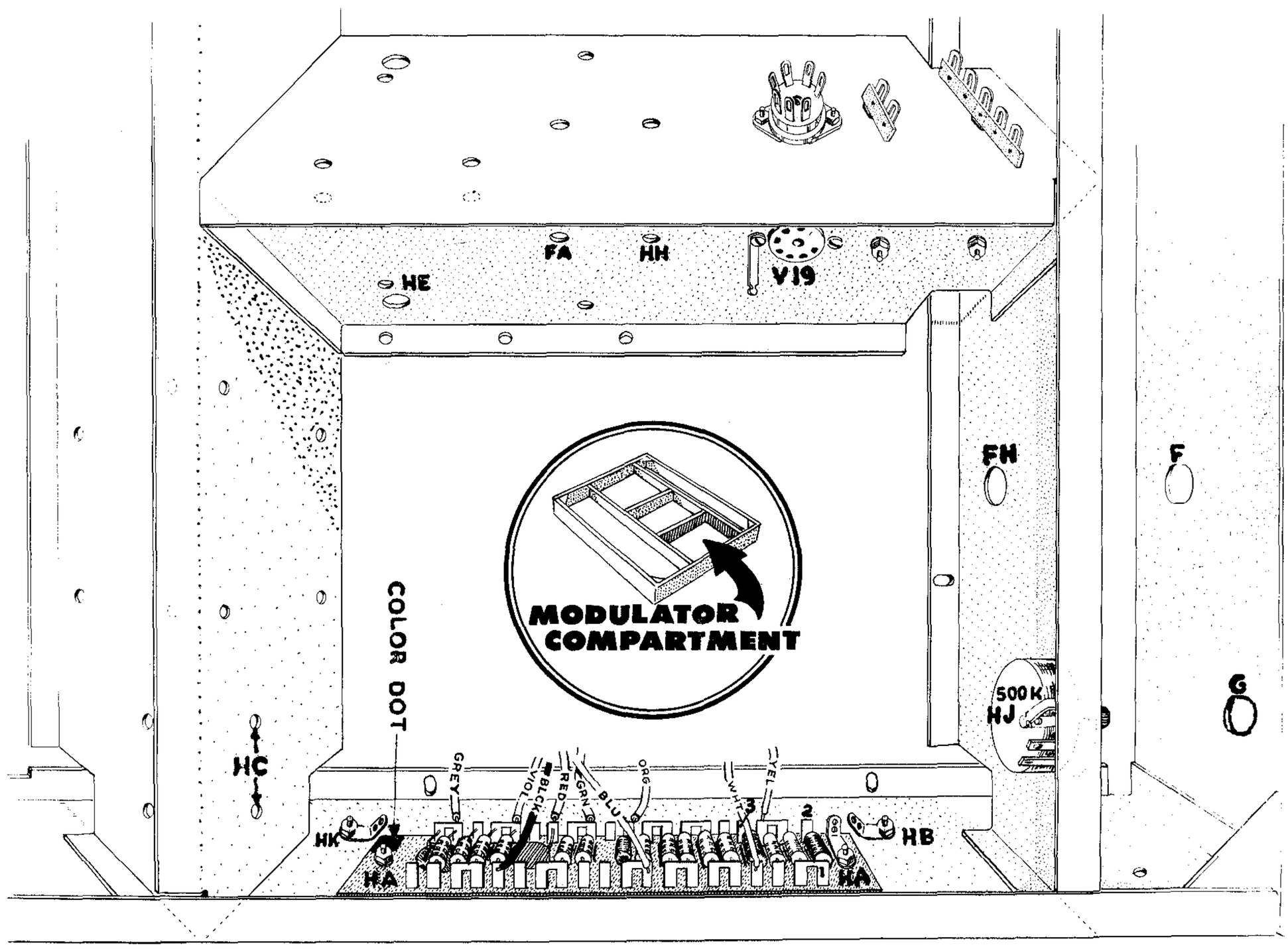

Pictorial 5

( ) Locate the speech amplifier component strip package. This is the terminal board with several resistors and capacitors mounted and soldered with pre-cut connecting leads. Mount the board at the location shown, using #6-32 x 3/4" RHMS through holes HA. After inserting the screws from the outside of the chassis side, slip a 3/8" spacer over each screw, then place the board on the screws with the end marked with red dot toward the rear of the chassis. Secure the unmarked end of the strip with a solder lug under a nut and the other end with a lockwasher and nut. Position on the solder lug as shown.

( ) Mount solder lugs at the two locations HB and HK. Use #6-32 x 1/4" RHMS. Position solder lugs as shown.

( ) Mount a 7 pin miniature socket at location V19. Orient pins as shown, with gap toward the front of the chassis. Use #3-48 x 1/4" PHMS with lockwashers under the nuts. Place a small solder lug under the head of the mounting screw nearest the chassis rear (lug will be on same side of the partition as the tube pin holes) and bend up as shown.

( ) Mount a .5 megohm screwdriver-adjust potentiometer at location HJ. Use a control solder lug and position control and lug as shown, with the lug near control lug 1. Tighten the 3/8-32 nut securely.

( ) Refer to Pictorial 6 for the following steps. This compartment will contain the wiring for the exciter stages.

( ) Mount a 5 lug (one ground) terminal strip at location FC and a 2 lug (one ground) terminal strip at location FB. Insert #6-32 x 1/4" RHMS through the mounting holes from the opposite side of the partition and position both strips as shown. Use lockwashers under the nuts.

NOTE: Of the shaft bushings supplied, some have a 3/8" thread length and the rest a 9/16" thread length. The inside diameter of both bushing types may be 17/64" or 1/4". The 17/64" diameter will be a loose fit on any of the shaft extensions provided while the 1/4" diameter will be fairly snug. It is suggested that these four bushing types be identified and separated. Check the parts list for the quantity of each.

( ) Install a 1/4" ID x 3/8" long brass shaft bushing at location FE. Insert bushing through hole from the front side of the partition. Use a 3/8" lockwasher and nut. Do not tighten securely at this time.

( ) Mount a feed-through insulator at location FK with the longer section in the exciter compartment. Place a solder lug between the two nuts at each end of the insulator. Note that the fiber washers are placed between the insulator and chassis on both sides. Tighten nuts firmly.

( ) Insert a 3/8" rubber grommet at location FF.

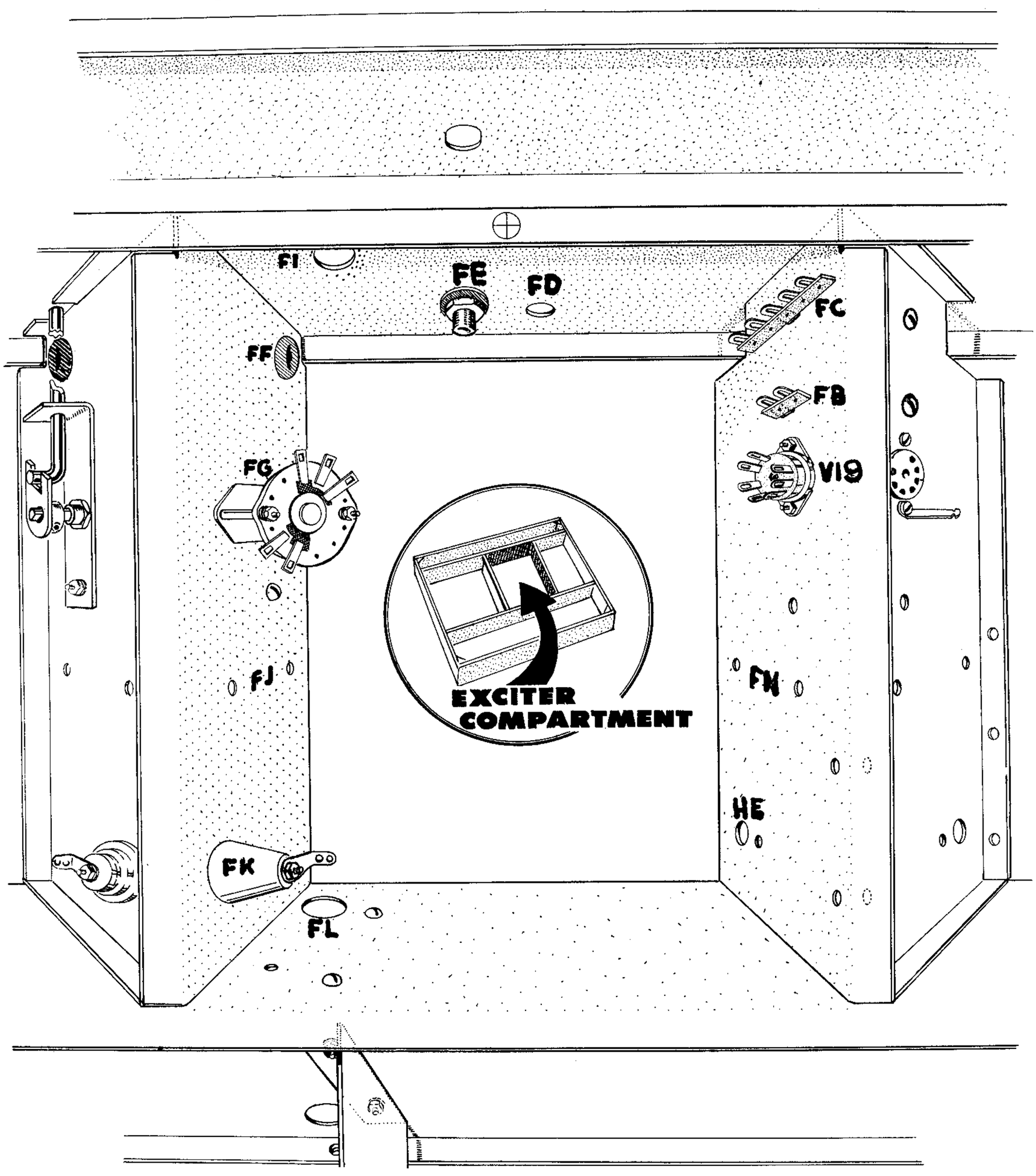

Pictorial 6

( ) Locate the Xtal-VFO switch. This is the small ceramic rotary switch with a total of five solder lugs and marked 63-151. Locate the switch shaft support bracket, which is the small metal piece with one flanged end and three holes in it, one on the flange. Also locate the switch drive shaft and a 1/4" ID by 9/16" long shaft bushing. The shaft is the only shaft with a right angle bend at one end. Refer to Pictorials 6 & 7.

( ) Mount the support bracket on the flanged side of the chassis partition with a #6-32 x 1/4" RHMS through the small mating mounting holes at FH. Slip the grooved end of the shaft through the bracket flange hole and through the hole in the inner front chassis piece.

( ) Mount the shaft bushing in the mating hole in the chassis front, first placing a 3/8" lock-washer over the bushing, and inserting from the rear side. Now insert shaft on through bushing, align shaft, and temporarily secure bushing with a 3/8" nut. Place an "E" retaining ring in the groove on each side of the bushing.

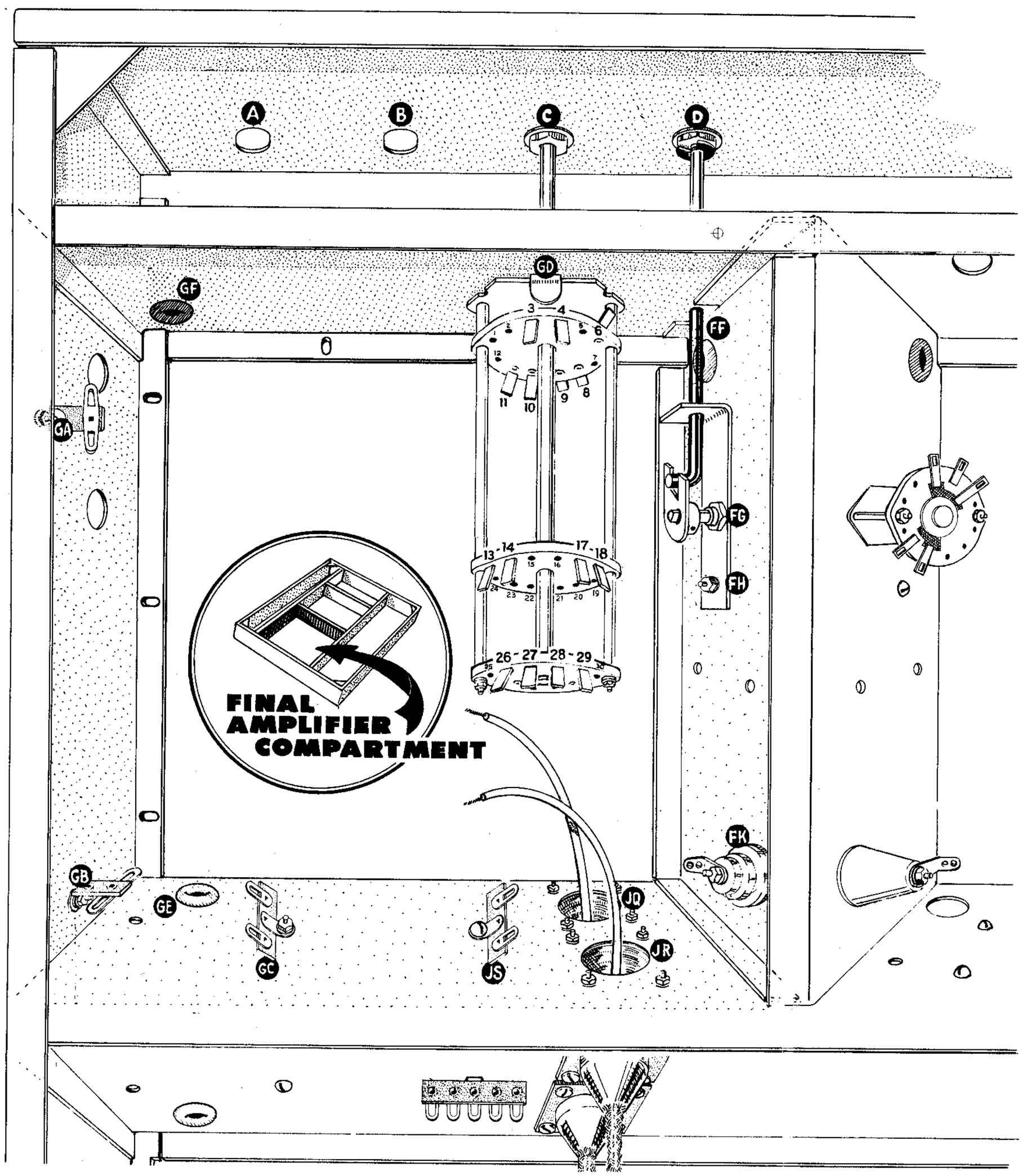

Pictorial 7

( ) Locate the Xtal-VFO switch. This is the small ceramic rotary switch with a total of five solder lugs and marked 63-151. Locate the switch shaft support bracket, which is the small metal piece with one flanged end and three holes in it, one on the flange. Also locate the switch drive shaft and a 1/4" ID by 9/16" long shaft bushing. The shaft is the only shaft with a right angle bend at one end. Refer to Pictorials 6 & 7.

( ) Mount the support bracket on the flanged side of the chassis partition with a #6-32 x 1/4" RHMS through the small mating mounting holes at FH. Slip the grooved end of the shaft through the bracket flange hole and through the hole in the inner front chassis piece.

( ) Mount the shaft bushing in the mating hole in the chassis front, first placing a 3/8" lockwasher over the bushing, and inserting from the rear side. Now insert shaft on through bushing, align shaft, and temporarily secure bushing with a 3/8" nut. Place an "E" retaining ring in the groove on each side of the bushing.

( ) Now place a 3/8" lockwasher over the switch bushing and mount the switch from the exciter compartment side of the partition through hole FG and through the mating hole in the bracket. Position switch so the locating lug enters the locating hole. Secure switch with a 3/8" nut.

( ) Now locate the Xtal-VFO switch drive plate, which is the small two pronged plate with attached bushing. Start a #8-32 x 1/4" Allen head set screw in the bushing. Slip the drive plate over the switch shaft, bushing side first, and position with the drive shaft between the prongs and the set screw over the flat on the switch shaft. Allow about 5/8" between the chassis partition and the drive plate for proper operation. Now tighten the set screw with the Allen wrench provided.

( ) Refer to Pictorial 7 for the following steps. This compartment will contain the final amplifier grid circuit wiring.

( ) Mount a 1 lug (no ground) terminal strip at location GA and position as shown. Use a #6-32 x 1/4" RHMS with a lockwasher under the nut.

( ) Mount a 1 lug (no ground) terminal strip at location GB and position as shown. Use a #6-32 x 1/4" RHMS with a lockwasher under the nut. Do not tighten nut securely at this time.

( ) Mount a 2 lug (no ground) terminal strip at location GC. Use a #6-32 x 1/4" RHMS with a lockwasher under the nut. Do not tighten nut securely at this time.

( ) Install a 1/2" rubber grommet at location GE and a 5/16" rubber grommet at location GF.

( ) Locate the mode switch which is the large 3-section rotary ceramic switch marked 63-196. Insert the switch shaft through the hole GD from the rear side of the inner front chassis piece. Slip a 3/8" nut and then a 9/16" long, 17/64" ID shaft bushing, hex end first, over the switch shaft. Place a 3/8" lockwasher over the bushing. Insert the switch shaft through the corresponding hole in the chassis front. Position switch with the locating lug in the locating hole and tighten the nut on the switch (not too securely at this time), and then place a nut on the chassis front shaft bushing and secure temporarily.

( ) Temporarily connect the inner conductor from JQ to the mode switch lug GD-29 (NS).

( ) Temporarily connect the inner conductor from JR to mode switch lug GD-26 (NS).

WIRING HARNESS & TOP PLATE INSTALLATION

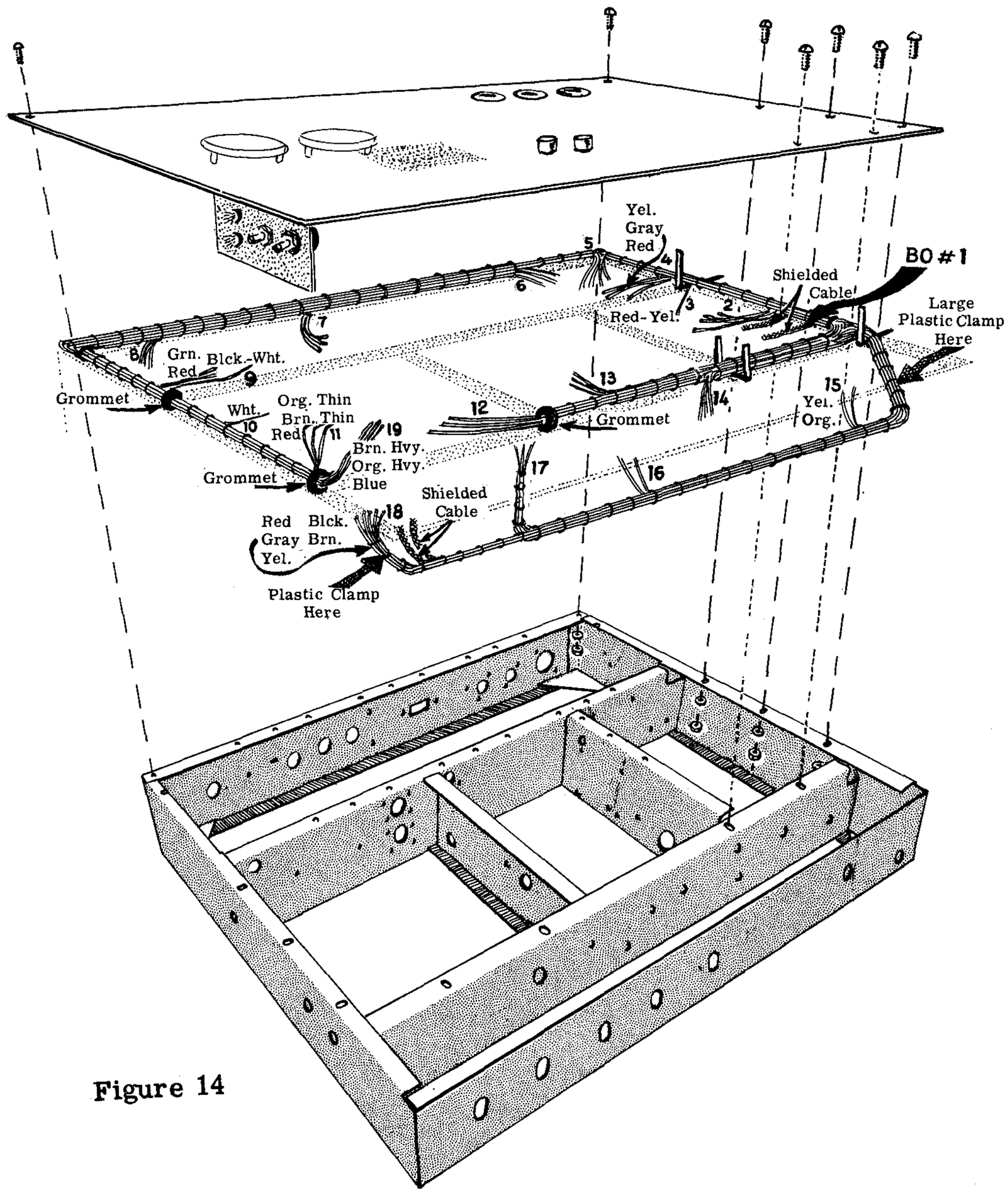

Figure 14

( ) Locate the wiring harness and, referring to Figure 14, install as follows: Place the chassis base top side up and with the front toward you. The tee intersection of the harness is inserted first with the tee placed just behind the extreme right end of the inner front chassis partition. Press the harness into the notch provided after squeezing the harness with a pair of pliers to a thickness of about 1/4" to allow it to slip through the slot and into the notch. Be careful not to break the insulation of the wires during this process.

( ) Now run the arm of the harness along the back side of the inner front partition underneath the top flange. Place it in the first notch at the center right partition, using the method described in the preceding step. Then pull the end of the arm through the grommet FF in the center left partition.

( ) Run the longer portion of the harness extending from the tee toward the back of the chassis along the right side under the top flange. Dress through the notch provided in the inner rear partition, around and along the rear of the chassis to the left side, then up the left side and pull the end through grommet GE. At the end of this run, place the heavy brown, heavy blue and heavy orange wires only through grommet GD in the inner front section. Dress the harness under the top flange along the entire run.

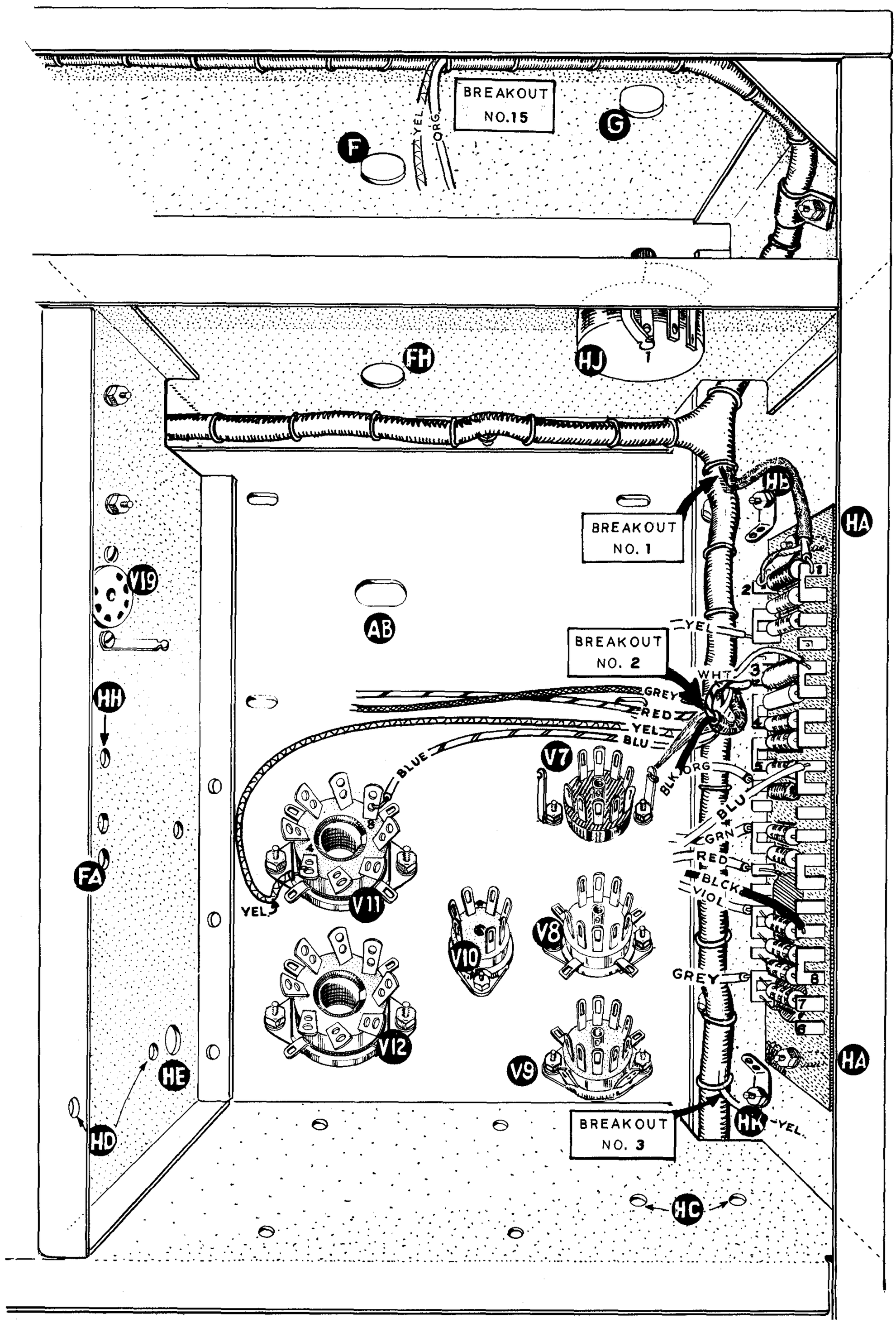
BREAKOUT NO.15
YEL
ORG
F
G
FH
HJ
HB
HA
BREAKOUT NO. 1
VI9
AB
BREAKOUT NO. 2
YEL
WHT
GREY
RED
YEL
BLU
BLUE
V7
BLK
ORG
BLU
GRN
RED
BLCK
VIOL
HH
FA
YEL
V11
V10
V8
GREY
V12
V9
HE
HD
BREAKOUT NO. 3
HK
YEL
HC

PICTORIAL 8

( ) Now run the remaining portion of the harness down along the bottom chassis flange of the chassis front. Secure the end near the tee to the right side of the chassis with the large plastic cable clamp, using #6-32 x 3/8" hardware in the hole provided. Insert the screw from the outside, and use a lockwasher under the nut.

( ) Secure the other end of the front harness run with the small plastic cable clamp. Use #6-32 x 3/8" hardware in the hole provided in the left chassis side as in the previous step. Dress the wires breaking out of the front harness run over the top end of the chassis front to keep them out of the way until the front panel is mounted.

( ) With the chassis placed top side up, place the top plate in position as shown in Figure 14. The crystal socket identifies the front edge which lines up with the chassis inner front partition. Check to be sure all wires are clear and not pinched between the top plate and chassis.

( ) Loosely secure the top plate to the chassis using #6-32 x 1/4" RHMS with lockwashers under the nuts at the mounting holes indicated. Do not secure mounting hardware in the two front and three side holes at the left front corner of the chassis, or in the larger transformer mounting holes at the rear portion of the top plate. Push the cable harness aside temporarily where necessary to start the nuts on the mounting screws.

( ) Before tightening the mounting screws securely, again check for pinched wires. Now make certain all mating holes in the top plate and chassis are aligned. Tighten the mounting screws securely.

At BO-1 (BREAKOUT) in the modulator compartment, referring to Pictorial 8, connect the wires as follows:

( ) The center conductor of the single conductor shielded wire to lug 1 of the component strip package (S1).

( ) The shield pigtail to the solder lug under the mounting nut, then bend the solder lug to touch lug 2 of the strip package and solder the entire connection.

At BO-2, connect the wires as follows:

( ) The red conductor of the two conductor shielded wire to lug 3 of the component strip package (S1). Leave the black conductor free temporarily.

( ) Solder the shield pigtail to the near solder lug on the V7 mounting screw.

( ) Connect the yellow harness wire to V11-4 (NS).

( ) Connect the blue wire to V11-8 (NS).

( ) Route the red and gray wires across the compartment against the top plate, then up the partition and insert through hole FA temporarily to keep them out of the way.

( ) At BO-3, run the red-yellow wire up to the strip pack and leave free temporarily.

At BO-4 in the power supply compartment, referring to Pictorial 9, connect the wires as follows:

( ) The red wire to JP-2 (NS).

( ) The yellow wire to EE-2 (NS).

( ) The gray wire to lug 1 (+) of selenium rectifier EG.

At BO-5, connect the wires as follows:

( ) The heavy brown and heavy black wires to JA_B-1 (NS).

( ) The white wire to JA_B-2 (NS).

( ) The red and red-yellow wires to JA_B-4 (NS).

( ) The green wire to JA_T-1 (NS).

( ) The gray wire to V14-2 (NS).

At BO-6, connect the wires as follows:

( ) The heavy gray wire to JD_T-3 (NS).

( ) The heavy yellow wire to JD_T-4 (NS).

( ) The gray and heavy white wires to JD_B-3 (NS).

( ) The heavy blue wire to JD_B-2 (NS).

( ) The orange and red wires to JD_B-1 (S3).

At BO-7, connect the wires as follows:

( ) The heavy red wire to lug 1 of the bleeder resistor (NS).

( ) The orange wire to lug 2 of the bleeder resistor (NS).

( ) The green wire to JM-1 (NS).

( ) The heavy black wire to JM-3 (NS).

( ) The heavy white and the black-white wires to JM-4 (NS). Leave the red and gray wires free temporarily.

At BO-8, connect the wires as follows:

( ) The brown wire to lug 5 of the relay (S1).

( ) The heavy yellow wire to V16-2 (NS).

( ) The heavy gray wire to V16-8 (NS).

At BO-9, connect the wires as follows:

( ) The green wire to JS-4 (NS).

( ) The black-white wire to JS-2 (NS).

( ) The red wire to JS-1 (NS).

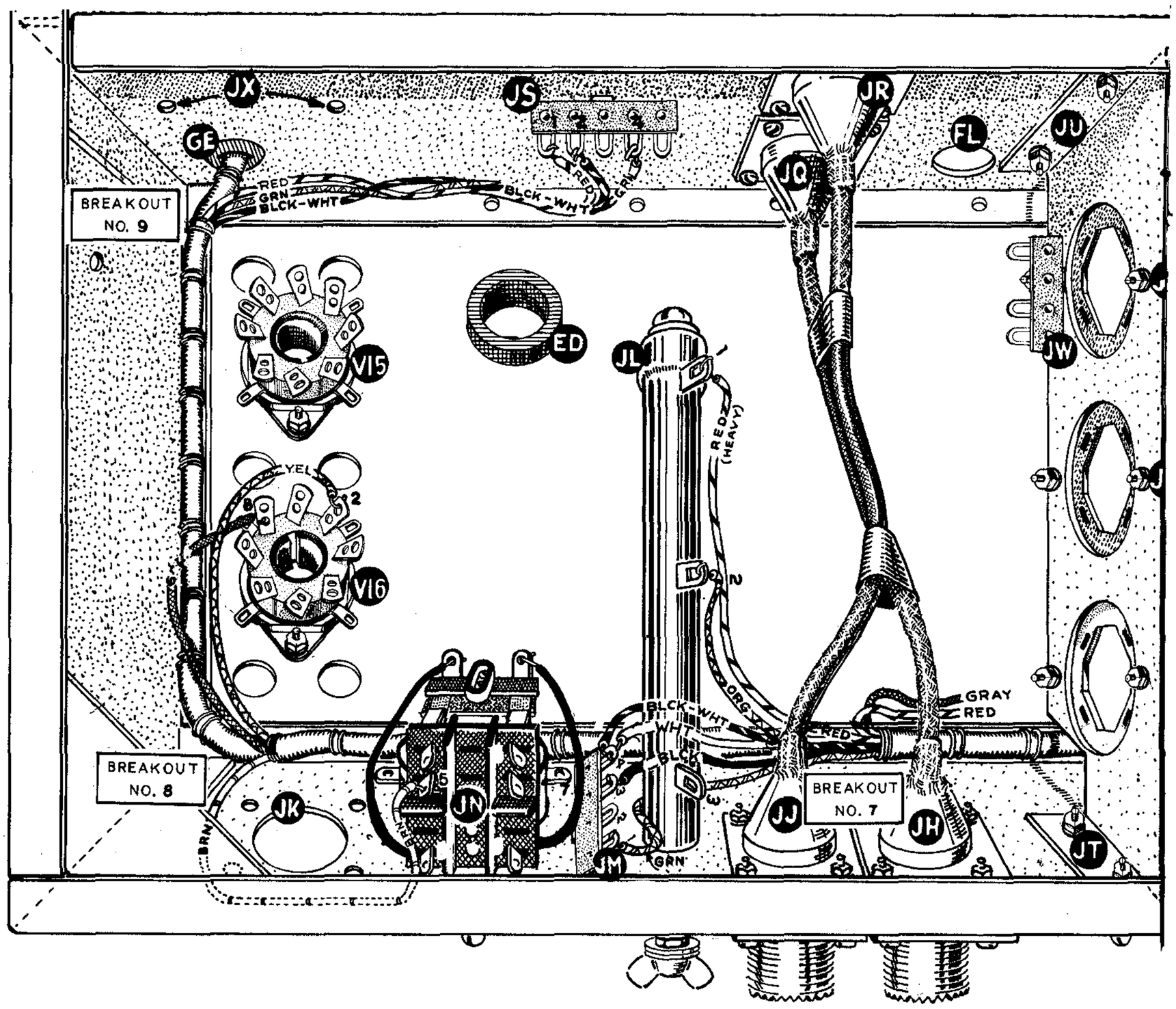

PICTORIAL 9

( ) At BO-10, in the final amplifier grid circuit compartment, referring to Pictorial 10, connect the white wire to mode switch GD-17 (NS). Run the wire directly across the compartment.

At BO-11, dressing the wires along the bottom chassis flange as shown, connect the wires as follows:

( ) The orange wire to GA-2 (S1).

( ) The brown wire to GD-11 (S1).

( ) The heavy red wire to GD-4 (S1).

At BO-12, connect the wires as follows:

( ) The green and black wires to GD-6 (S2).

( ) The blue wire to GD-8 (S1).

( ) The orange wire to GD-9 (S1).

( ) The short yellow wire to GD-10 (S1).

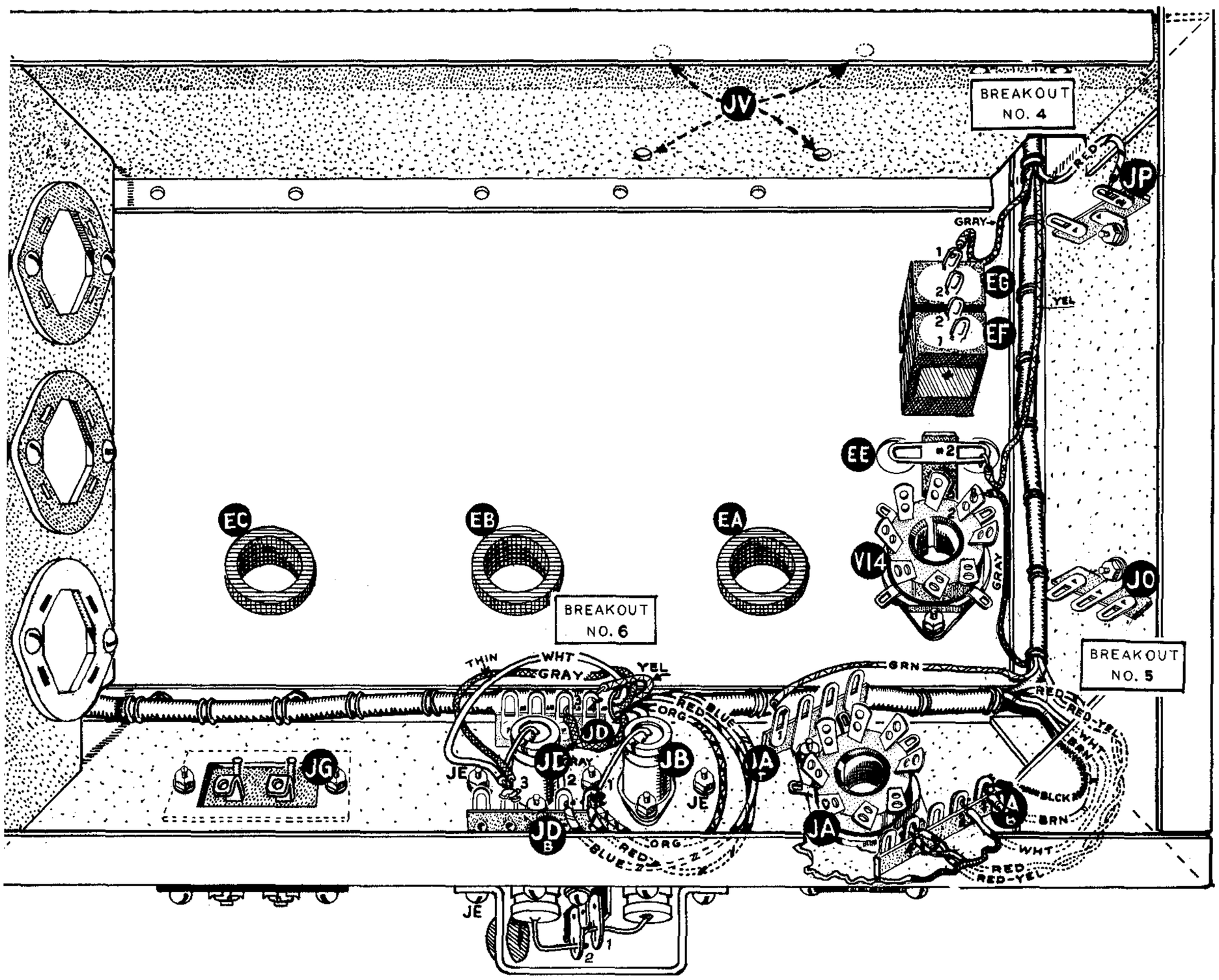

( ) The red-yellow wire to CB-4 (NS).

( ) The black-white wire to CB-2 (NS).

( ) Run the red and brown wires down the left center partition, across the rear of the compartment and connect the brown wire to GC-1 (NS) and the red wire to GB-2 (NS).

( ) Twist the long yellow, white, and gray wires together and run them along the left center partition, then out, and connect the yellow wire to CK-1 (NS), the gray wire to CJ-1 (NS), and the white wire to CI-2 (NS).

( ) In the final amplifier grid circuit compartment, connect the blue wire coming from hole CC to mode switch GD-13 (NS).

( ) Connect the lead from V18-5 to terminal strip GC-1 (NS), running the wire down along the top plate, then up to the terminal strip, as shown.

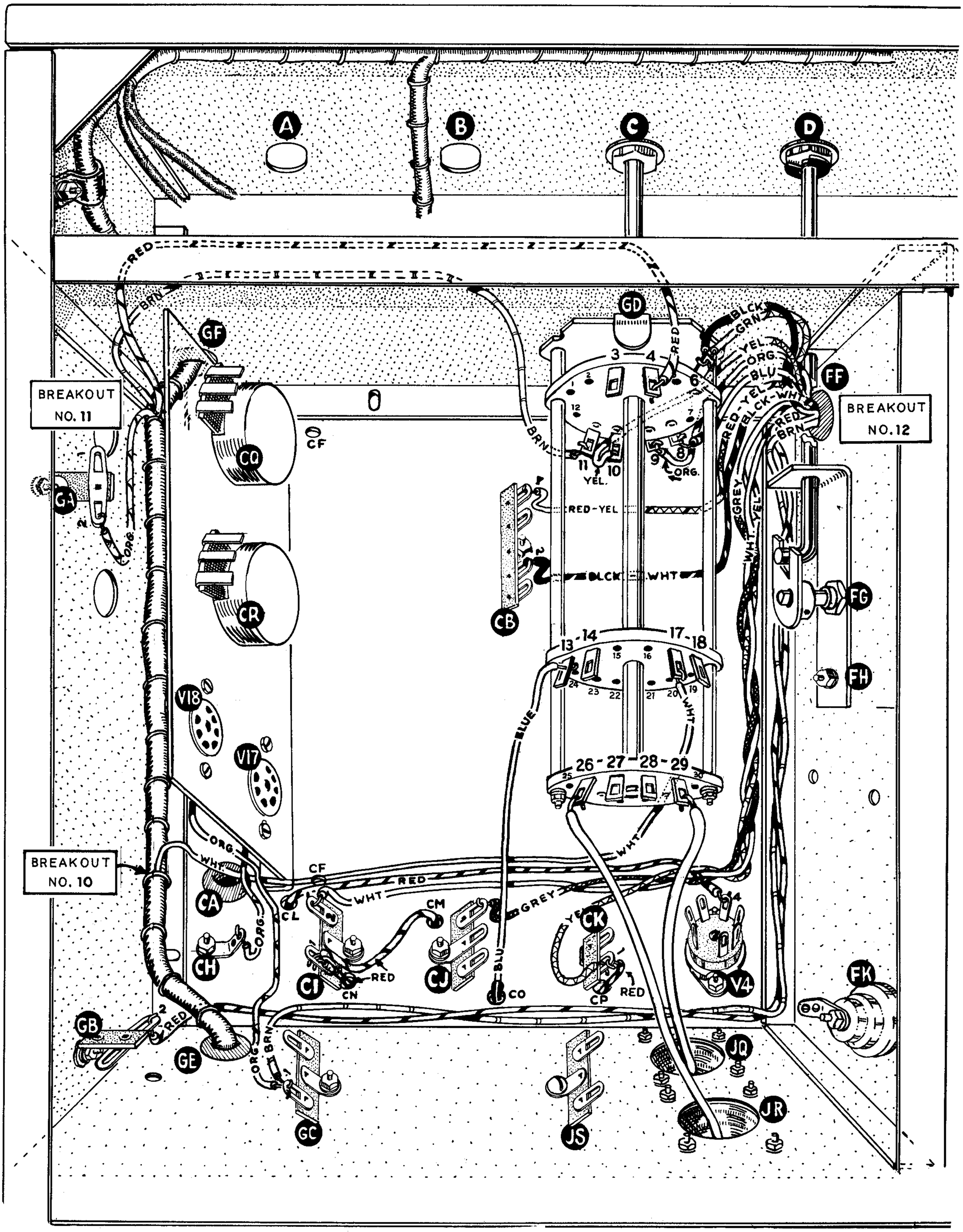

PICTORIAL 10

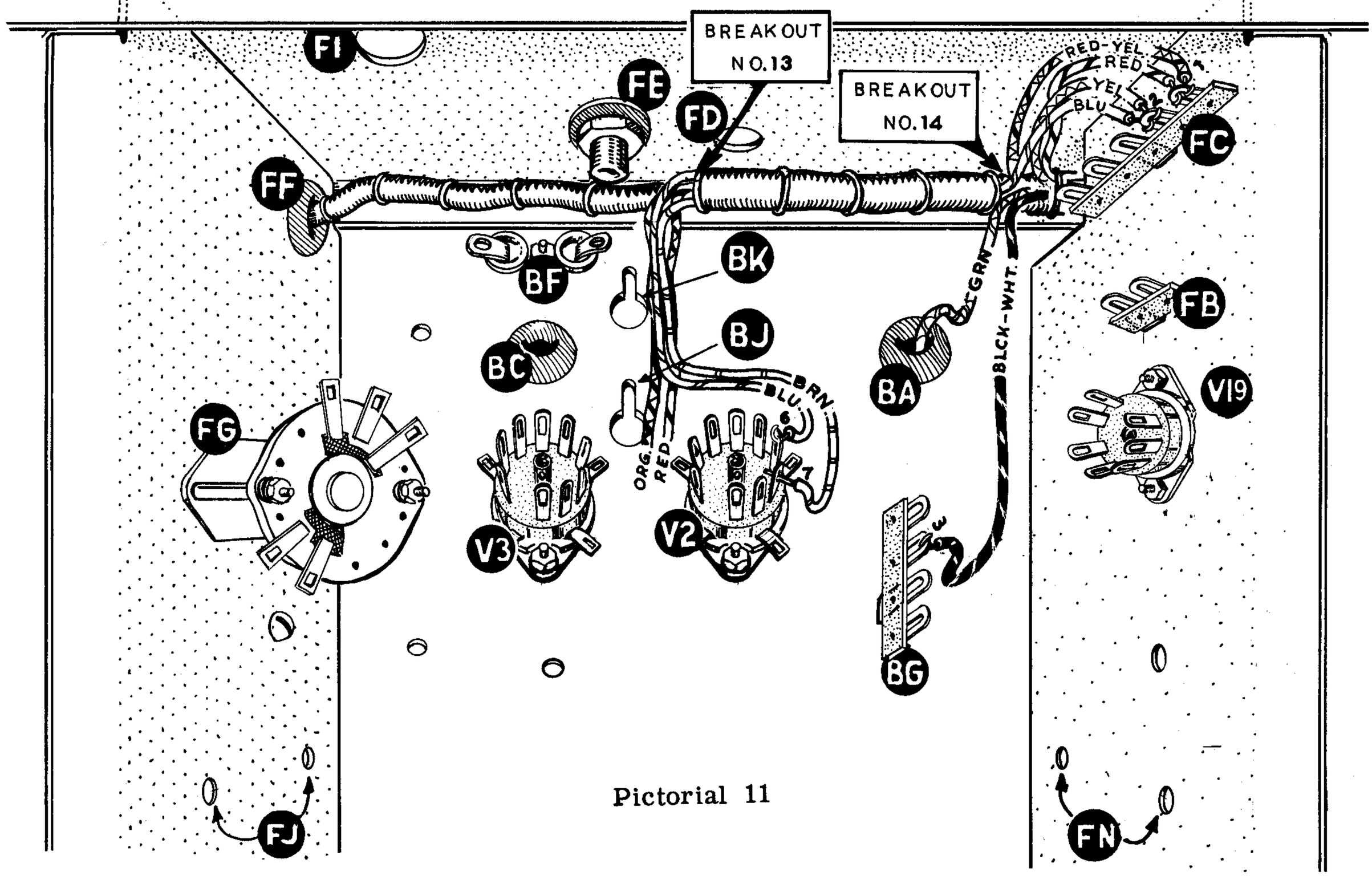

Pictorial 11

At BO-13 in the exciter compartment, referring to Pictorial 11, connect the wires as follows:

( ) The brown wire to V2-7 (NS).

( ) The blue wire to V2-6 (NS). Leave the orange and red wires free temporarily.

At BO-14, connect the wires as follows:

( ) The red-yellow and red wires to FC-1 (NS).

( ) The blue and yellow wires to FC-2 (NS).

( ) The black-white wire to BG-3 (NS). Insert the green wire through grommet BA and leave free temporarily.

FINAL AMPLIFIER TANK CIRCUIT ASSEMBLY

( ) Locate the front panel of the final amplifier shield. This is the rectangular piece shown in Figure 15 with the three flanged edges.

( ) Locate the final amplifier band switch. This is the large single deck rotary switch with five double lugs and is marked 63-155. Before mounting the switch, carefully enlarge the solder lugs with an ice pick to allow passage of the coil taps. Mount the switch at location KA, inserting from the flanged side of the panel. Make sure the locating lug is seated in the locating hole. Secure with a 3/8" nut.

( ) Mount a standoff insulator at location KB on the flanged side of the panel. Use the hardware supplied, placing the cork washer between the insulator and the panel.

( ) Mount a 17/64" ID by 3/8" long brass bushing at location KC, inserting from the side opposite the flanges. Use a 3/8" nut and lockwasher to secure the bushing.

( ) Mount a spade lug at locations KE and KF. Mount the lugs on the flanged side of the panel, referring to Figure 15 for mounting instructions. Use #6-32 x 1/4" RHMS with lockwashers under the nuts.

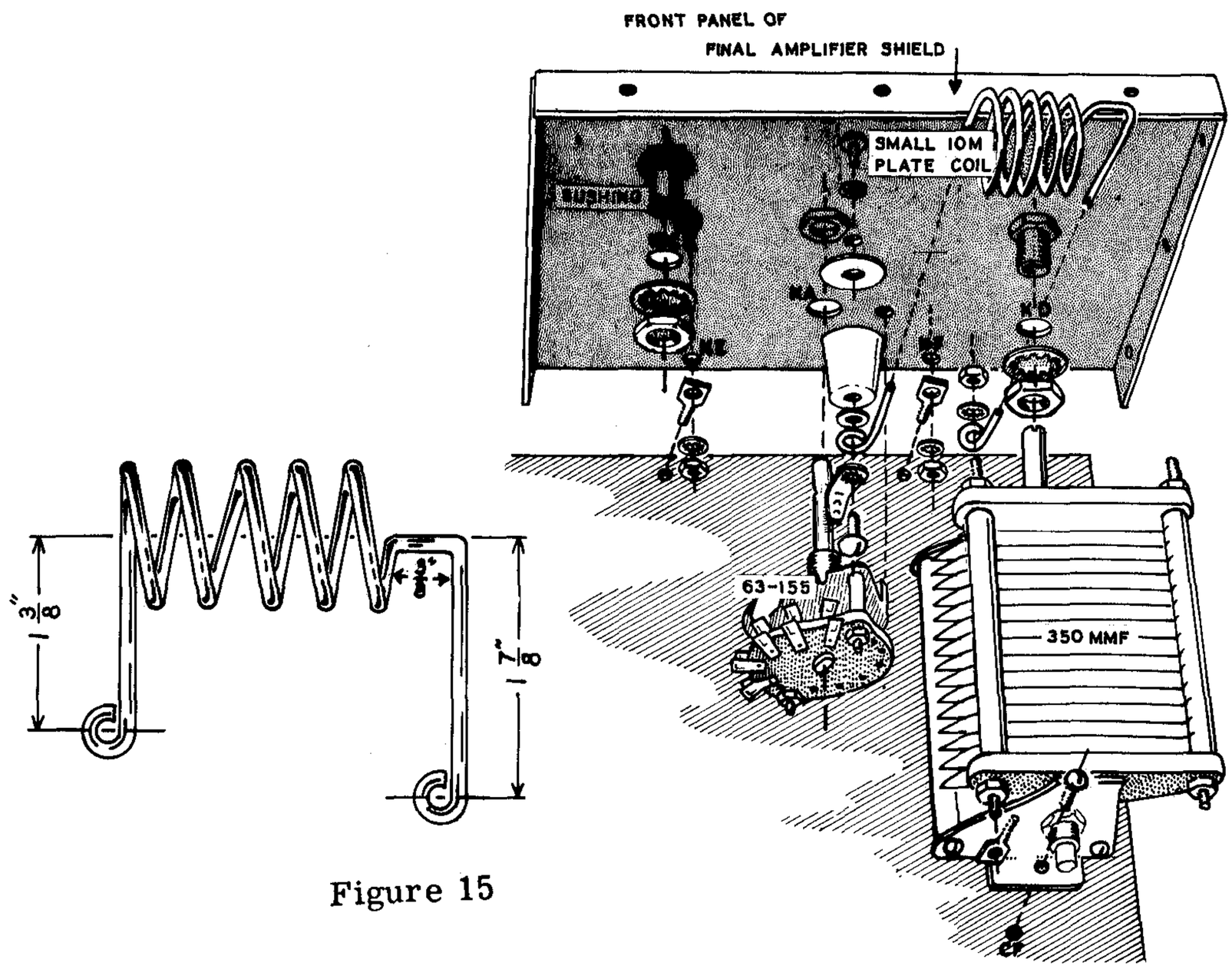

Figure 15

( ) Mount the assembled panel by means of the spade lugs in the two chassis and top plate holes at the left front of the top plate, when viewing the chassis from the front. Refer to Figure 16 for this and the succeeding steps. Secure the shield panel with #6 nuts with lockwashers. It will be necessary to remove the mode switch mounting nut and push the switch back slightly to gain access to the mounting nut for spade lug KE. Secure the mode switch after mounting the shield panel.

( ) Mount the large 350 mmf variable capacitor at mounting holes CF. Slip a 3/8" nut and a 3/8" lockwasher over the capacitor shaft before inserting through hole KD in the shield panel. Secure the capacitor with #6-32 x 3/8" RHMS, using lockwashers under the nuts.

( ) Slip a 17/64" ID x 3/8" bushing over the capacitor shaft and secure in hole KD with 3/8" nut and lockwasher.

( ) Locate the final amplifier plate coils. These are the large coils of heavy wire, one large coil with several taps and another five turn coil. Refer to Figure 16 for lead dress and placement of the coils. Bend the short lead at the end of the large coil with the most turns before the tap into a small eye for mounting on the standoff insulator CB. Position the eye, so it is accessible, with a screwdriver placed through the loops at the coil taps.

( ) Holding the tapped coil in position with the formed eye on CB, carefully bend the tap leads to conform to the lead dress and band switch connections shown in the pictorial. The first tap from the eye connects to KA-4, the second to KA-3, the third to KA-2, and the long lead at the top end of the coil connects to KA-1. Cut off the excess lead length. Do not solder leads now.

( ) Using a #6-32 x 1/4" RHMS with a #6 solder lug under the head, mount the tapped coil on standoff insulator CB. Place the flat washer, left after removing the screw supplied with the insulator, between the coil eye and the insulator. Position the solder lug as shown and secure.

( ) Connect the coil tap leads to their respective switch lugs. Make sure the coil and shield panel are both perpendicular to the chassis. Now generously flow solder over the wire and switch lug at KA-2, KA-3 and KA-4. Do not solder KA-1 at this time.

( ) Form the leads of the small coil to conform to the pictorial. Bend the lead coming off the coil parallel to the coil axis to a right angle so it is parallel to the lead coming off the other end of the coil. Make the bend 3/8" from the coil. Now form eyes as before at the end of each lead.

( ) Now mount the small coil as shown between standoff insulator KB and lug 1 of the tuning capacitor. Use a #6 nut and lockwasher at the capacitor lug and secure. Use a 6-32 x 3/8" RHMS with a #6 solder lug under the head at the insulator. Place the flat washer, left after removing the screw supplied with the insulator, between the coil eye and the insulator. Position the solder lug so it contacts switch contact KA-1. Now connect the top coil tap to the solder lug and flow solder over the entire KA-1 connection.

( ) Mount a spade lug at the tuning capacitor lug 2 as shown, positioning vertically. Secure with a #6 nut and lockwasher.

( ) Cut an 8" length of #16 bare wire and pass one end through the solder lug on standoff insulator CB and connect to switch lug KA-5 (S1). Now solder the wire to the solder lug. Bend the other end of the wire up along the tapped coil temporarily.

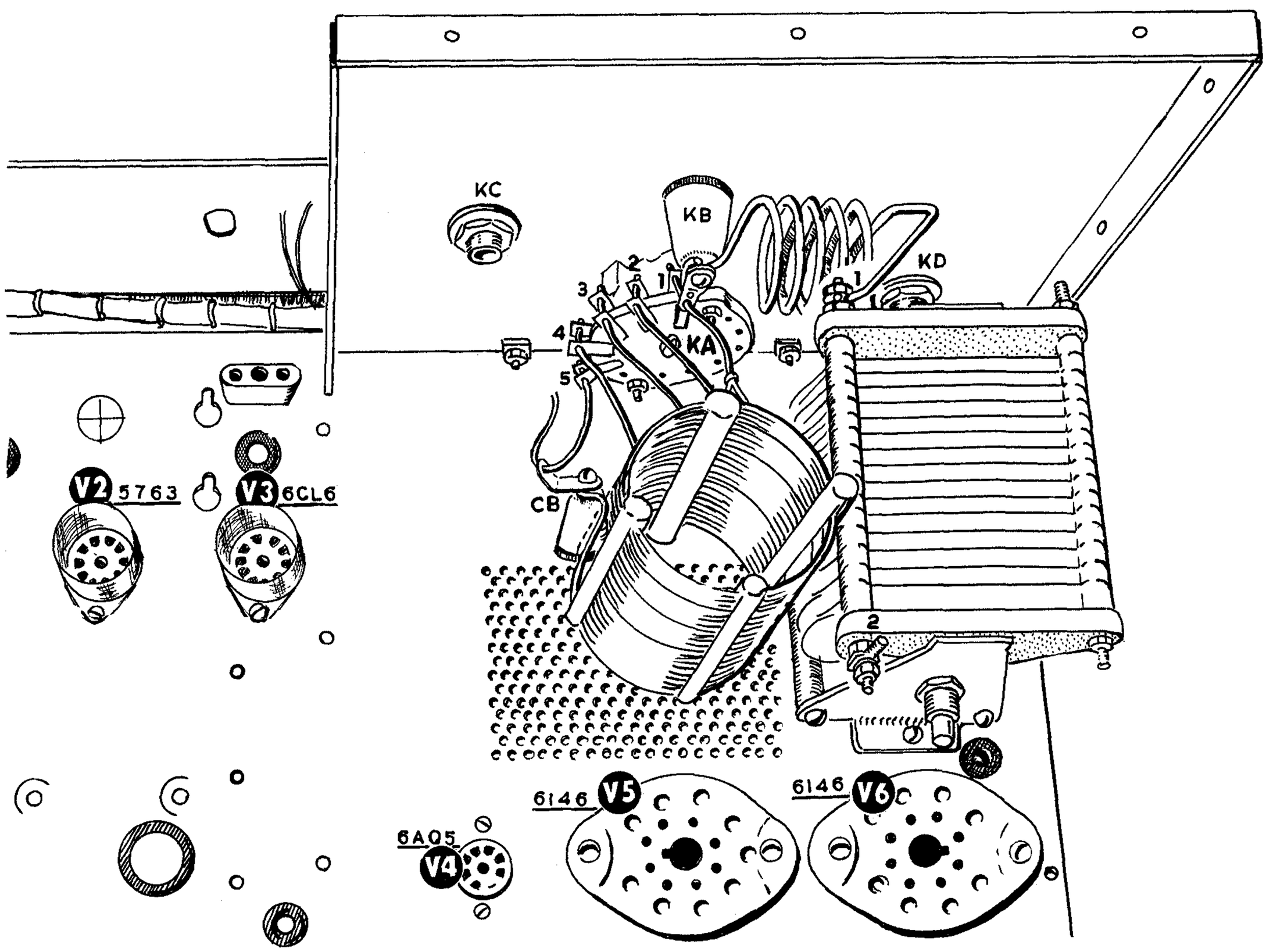

Figure 16

( ) Before proceeding with final assembly of the amplifier, mount the plate transformer, marked 54-30, at the location around grommet ED, just behind the final amplifier. Pull the leads through grommet ED and secure the transformer with #8-32 x 3/8" RHMS in the six mounting holes provided. Move the cable harness aside temporarily where necessary to gain access to the mounting screws. Use #8 lockwashers under the nuts. It will be necessary to temporarily dismount the relay and terminal strip JM for screw access.

( ) Locate the three gang variable loading capacitor marked 26-45 and the variable loading capacitor mounting bracket. Referring to Figure 17, assemble the capacitor to the bracket, using #6-32 x 3/16" RHMS through the three triangularly spaced holes in the bracket into the mating tapped holes in the bottom of the capacitor. Use #6 lockwashers under the screw heads. Do not tighten the screws at this time.

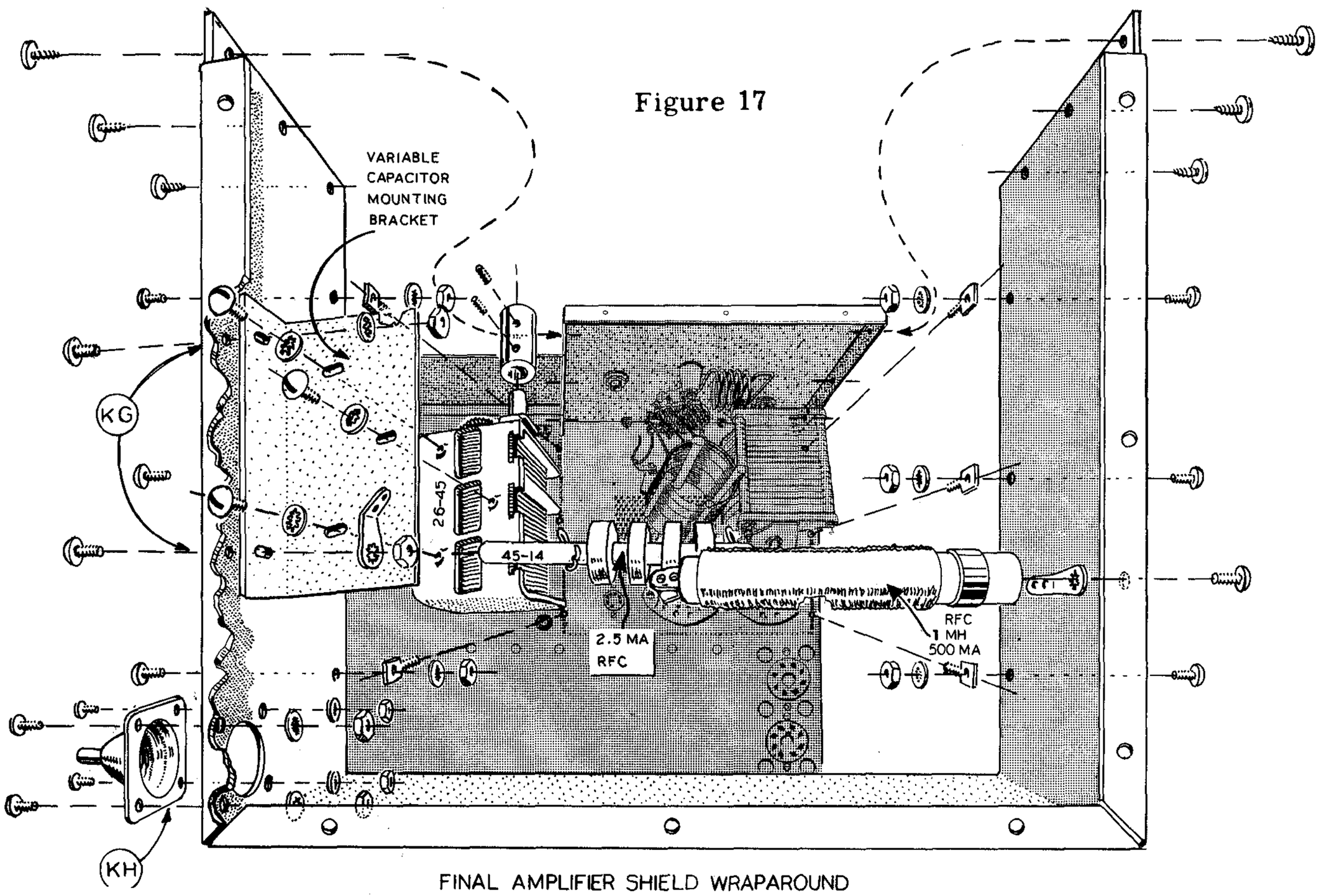

Figure 17

FINAL AMPLIFIER SHIELD WRAPAROUND

( ) Locate the final amplifier shield wraparound and mount the variable capacitor bracket assembly on location KG on the inside wall of the wraparound on the side with the large hole KH in one corner. Use #6-32 x 3/8" RHMS. Place a solder lug under the nut on the mounting screw nearest KH. Do not tighten securely at this time.

( ) Slide a 1/4" shaft coupling halfway onto the loading capacitor shaft and secure with a #6-32 set screw.

( ) Mount a coaxial connector shield on the outside wall of the wraparound at location KH. Use #3-48 PHMS with lockwashers under the nuts.

( ) Mount spade lugs in the three holes at the bottom of each of two sides of the wraparound. Mount the spade lugs on the inside of the wraparound, using #6-32 x 1/4" RHMS, and referring to Figure 17 for mounting instructions.

( ) Now mount the shield wraparound by means of the spade lugs through the six mating holes in the chassis and top plate as shown in the pictorial. Make sure the rear of the wraparound does not touch any of the lugs on V5 and V6. Bend lugs for clearance, if necessary. Underneath the chassis, use #6 nuts with lockwashers on the spade lugs, placing a #6 solder lug under the nut nearest grommet DF and a 3 lug,(center ground) terminal strip under the nut nearest grommet BC. This terminal strip will be designated BB. Position BB as shown in Pictorial 13, page 46. Secure the wraparound to the front shield panel with six #6 sheet metal screws in the holes provided.

( ) Insert the 4" long loading capacitor shaft extension through the bushing KC and into the shaft coupling on the loading. capacitor shaft. Tighten temporarily with a #6-32 setscrew.

( ) Now, with the shaft extension providing proper alignment, tighten all loading capacitor mounting bracket screws securely. Remove the shaft extension.

( ) Referring to Figure 18, pass the bare wire from standoff insulator CB through lugs 1, 2, and 3 of the loading capacitor. Carefully bend the lugs into position so the wire slides through easily and projects 1/4" beyond lug 3. Now solder lugs 1, 2, and 3. Make sure the wire does not touch the capacitor frame at any point.

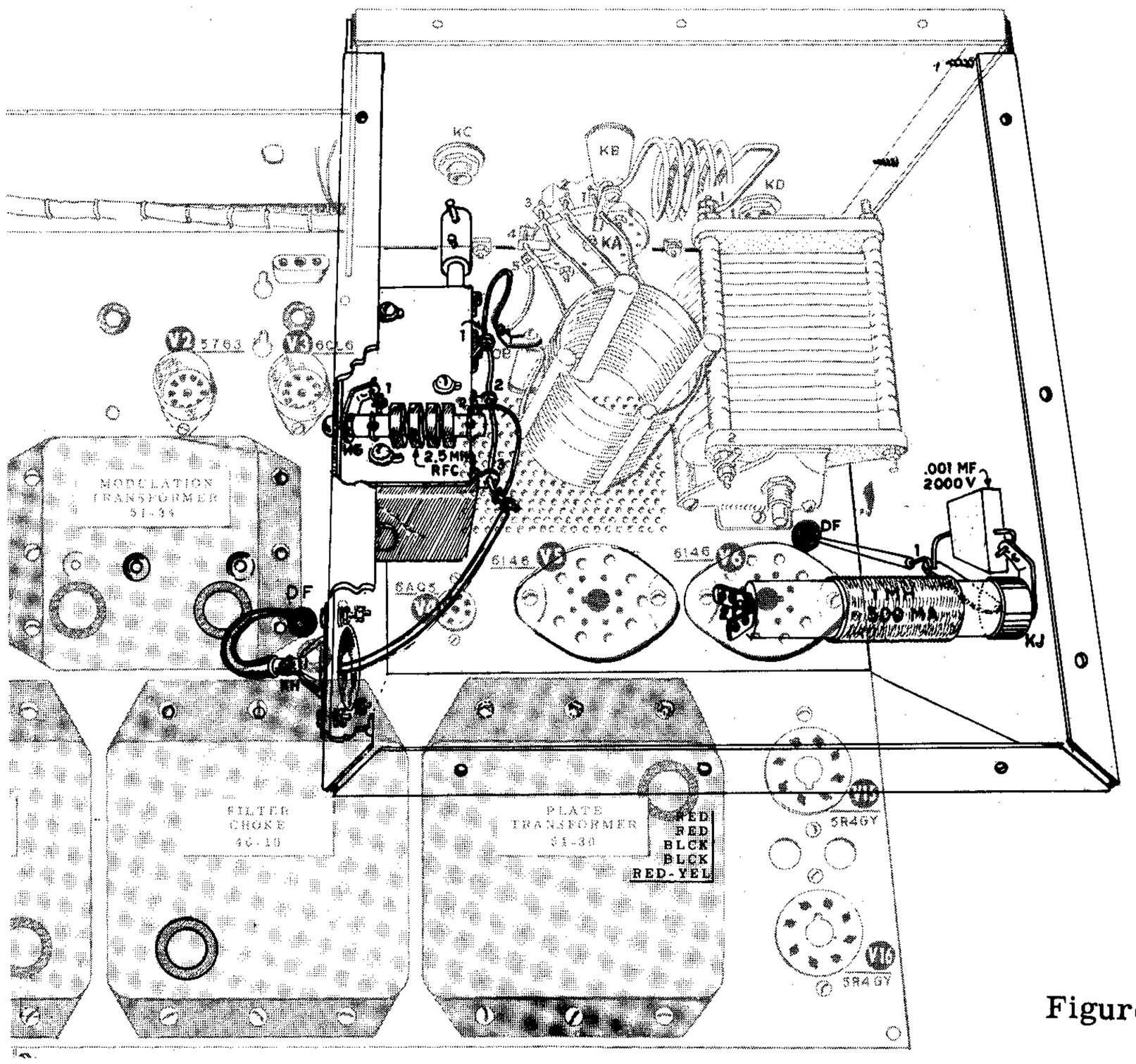

Figure 18

( ) Mount one of the 2.5 mh RFC marked 45-14 by screwing it onto the projecting threads of the loading capacitor bracket mounting screw nearest KH.

( ) Using #20 bare wire, connect lug 1 of the RFC to the solder lug under the mounting screw nut. Solder both connections.

( ) Using #20 bare wire, connect lug 2 of the RFC (S1) to the projecting end of the #16 wire from lug 3 of the loading capacitor (NS).

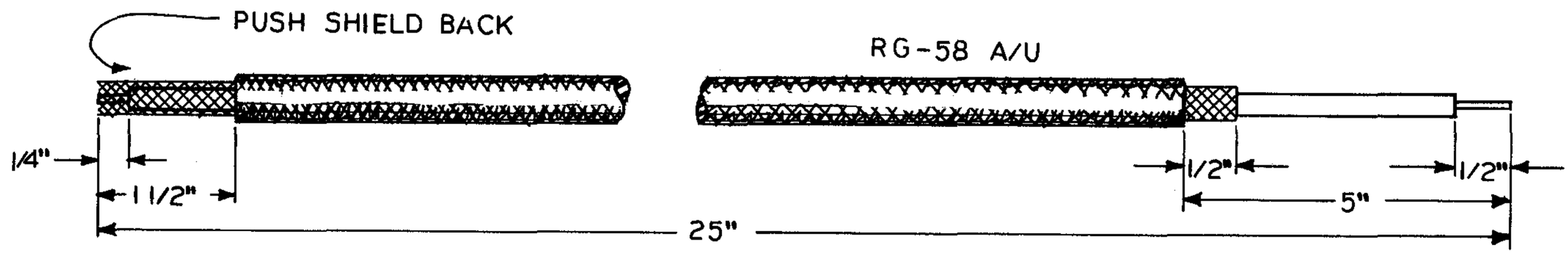

Figure 19

( ) Cut a piece of coaxial cable 25" long and prepare as shown in Figure 19. From one end strip away 5" of the outer insulation, then cut the shield off 1/2" from the insulation. Strip and tin 1/2" of the end of the center conductor. At the other end, strip away 1 1/2" of the outer insulation, push back the shield and strip and tin the inner conductor for 1/4".

( ) Referring to Figure 18, insert the long exposed inner conductor of the coaxial cable through the coax shield KH from the outside, sliding the shield braid over the neck. Connect the inner conductor to the projecting end of the #16 wire extending from lug 3 of the loading capacitor (S2). Now solder the shield braid to the neck of the connector shield KH.

( ) Pass the other end of the coax through grommet DF and then through hole FL into the power supply compartment. Referring to Pictorial 12, route the coax as shown to location JK.

( ) Install a coaxial connector at location JK and connect the coaxial cable to the connector, using a connector shield. Follow the same procedure for connection as used at locations JJ and JH.

( ) Secure the cable at the location indicated in Pictorial 12 with the plastic cable clamp. Use #6-32 x 3/8" hardware.

( ) Locate the 1 mh, 500 ma RFC illustrated as 45-15 and install on the final amplifier shield wraparound at location KJ, using a #6-32 x 3/8" RHMS and placing a #6 solder lug between the RFC and the shield.

( ) Connect a .001 mf, 2000 V mica capacitor between RFC lug 1 (NS) and the solder lug (S1). Place the capacitor flat against the shield as shown.

( ) Cut a length of #18 hook up wire 8 1/2" long and strip each end for 1/2". Connect one end to RFC lug 1 (S2). Pass the other end through the 5/16" grommet and connect to terminal strip GC-2 (NS) under the chassis. Refer to Figure 18 and Pictorial 15, page 50.

TRANSFORMER AND FILTER CHOKE MOUNTING

( ) When mounting the remaining transformers, use long nose pliers to place screws, lock-washers, and nuts in hard to reach places. A longer screwdriver and a 5/16" nut starter and driver will also be of use, if available. Refer to Figure 20.

( ) Mount the plate supply filter choke, marked 46-10, at the location around grommet EC. Pull the leads through the grommet and secure with #8-32 hardware.

( ) Mount the power supply transformer marked 54-65 at the location around grommets EA and EB. Pull the green, brown, yellow, and green-white leads through EA and the red, black, red-blue, and red-yellow leads through grommet EB. Secure the transformer with #8-32 hardware as before.

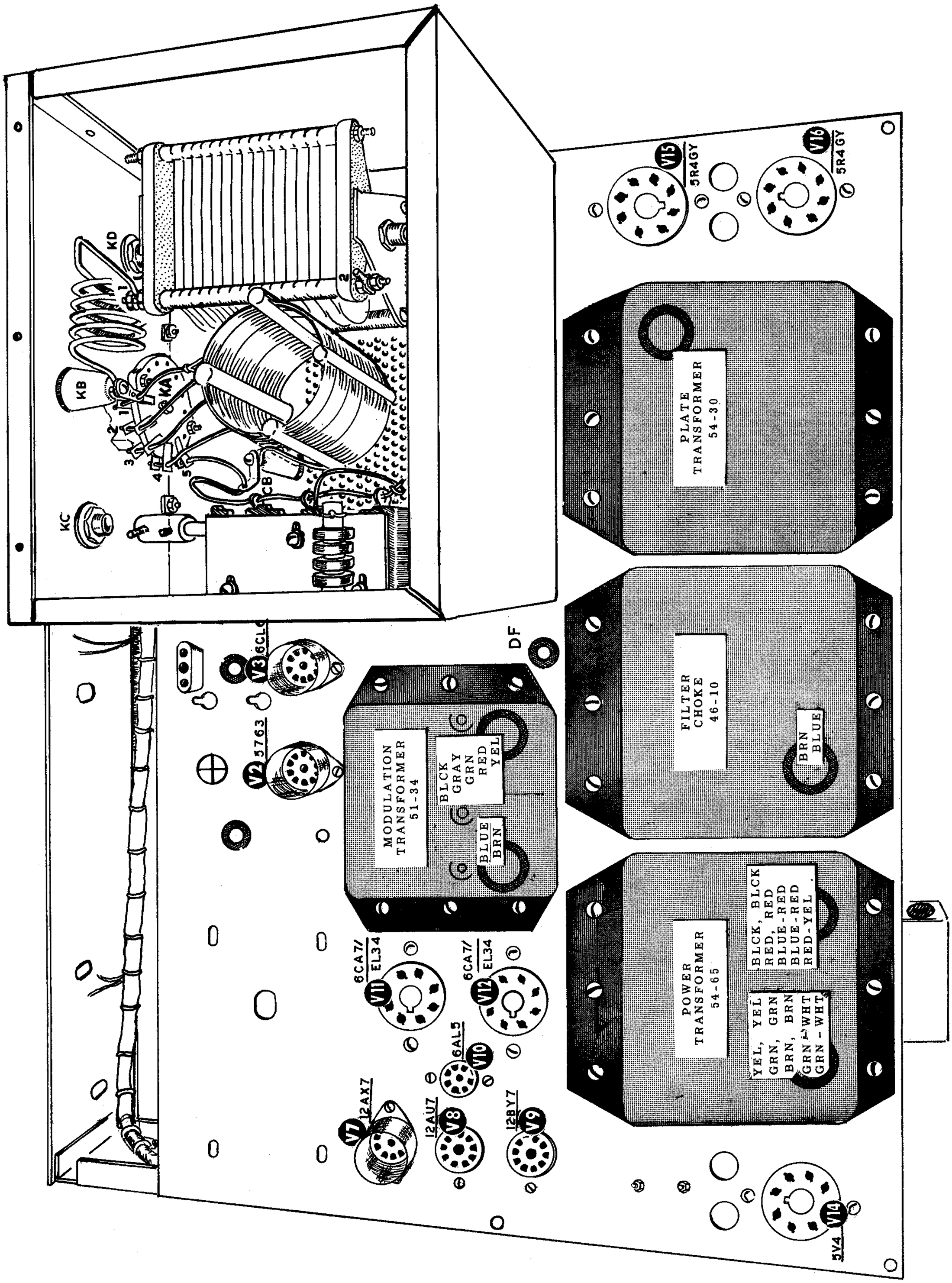
KD
KB
KA
KC
CB
KG
DF
V1 5R4GY
V16 5R4GY
PLATE TRANSFORMER 54-30
FILTER CHOKE 46-10
BRN BLUE
MODULATION TRANSFORMER 51-34
BLCK GRAY GRN RED YEL
BLUE BRN
V2 5763
V3 6CL6
V7 12AX7
V8 12AU7
V9 12BY7
V10 6AL5
V11 6CA7/EL34
V12 6CA7/EL34
POWER TRANSFORMER 54-65
BLCK, BLCK
RED, RED
BLUE-RED
BLUE-RED
RED-YEL
YEL, YEL
GRN, GRN
BRN, BRN
GRN - WHT
GRN - WHT
V14 5V4

Figure 20

Pictorial 12

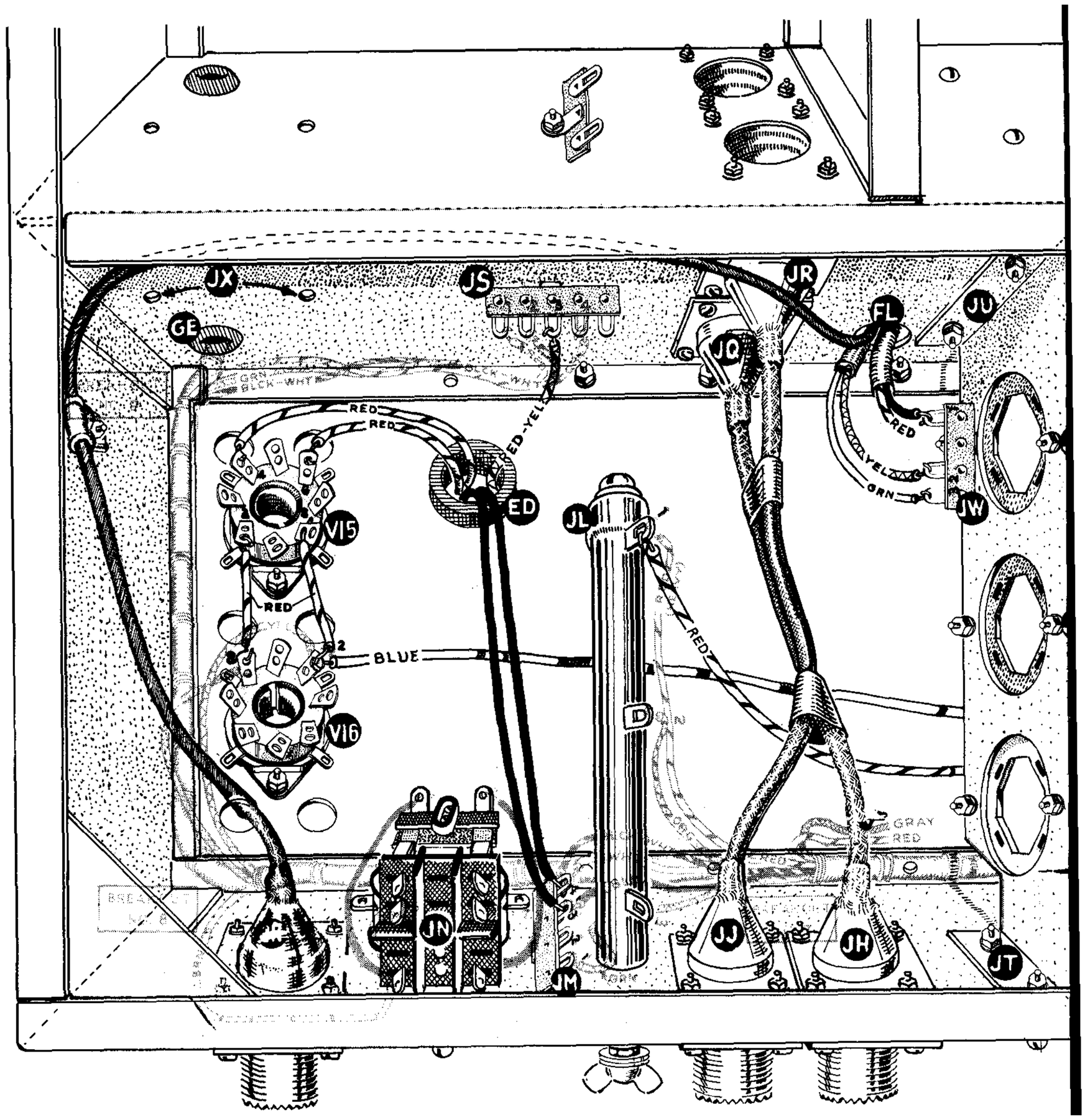

( ) Mount the modulation transformer at the location around grommets DA and DB. Pull the blue and brown leads through grommet DA and pull the yellow, green, red, black, and slate wires through grommet DB. Secure the transformer with #8-32 hardware as before, except at the mounting hole nearest tube socket V3; use a #6-32 x 3/8" RHMS here, placing a 5 lug (center ground), terminal strip under the nut and lockwasher on the sub-chassis side. Refer to Pictorial 13, page 46, and position the terminal strip as shown. This terminal strip will be designated BH.

( ) Now place the transmitter, bottom side up, resting on the transformers and final amplifier shield with the rear of the chassis nearest you. The remaining sub-chassis wiring will now be carried to completion before the transmitter need be turned over again.

TRANSFORMER LEAD CONNECTIONS AND FILAMENT WIRING

In the following steps, before making each connection, cut the transformer leads to the proper length, strip and tin the ends for 3/8", then make the connections.

( ) In the power supply compartment, referring to Pictorial 12, connect one of the green-white leads from grommet EA to terminal strip EE lug 1 (S1).

( ) Connect the other green-white lead from EA to V14-10 (S1).

( ) Connect one of the yellow leads from EA to V14-2 (S2).

( ) Connect the other yellow lead from EA to V14-8 (S1).

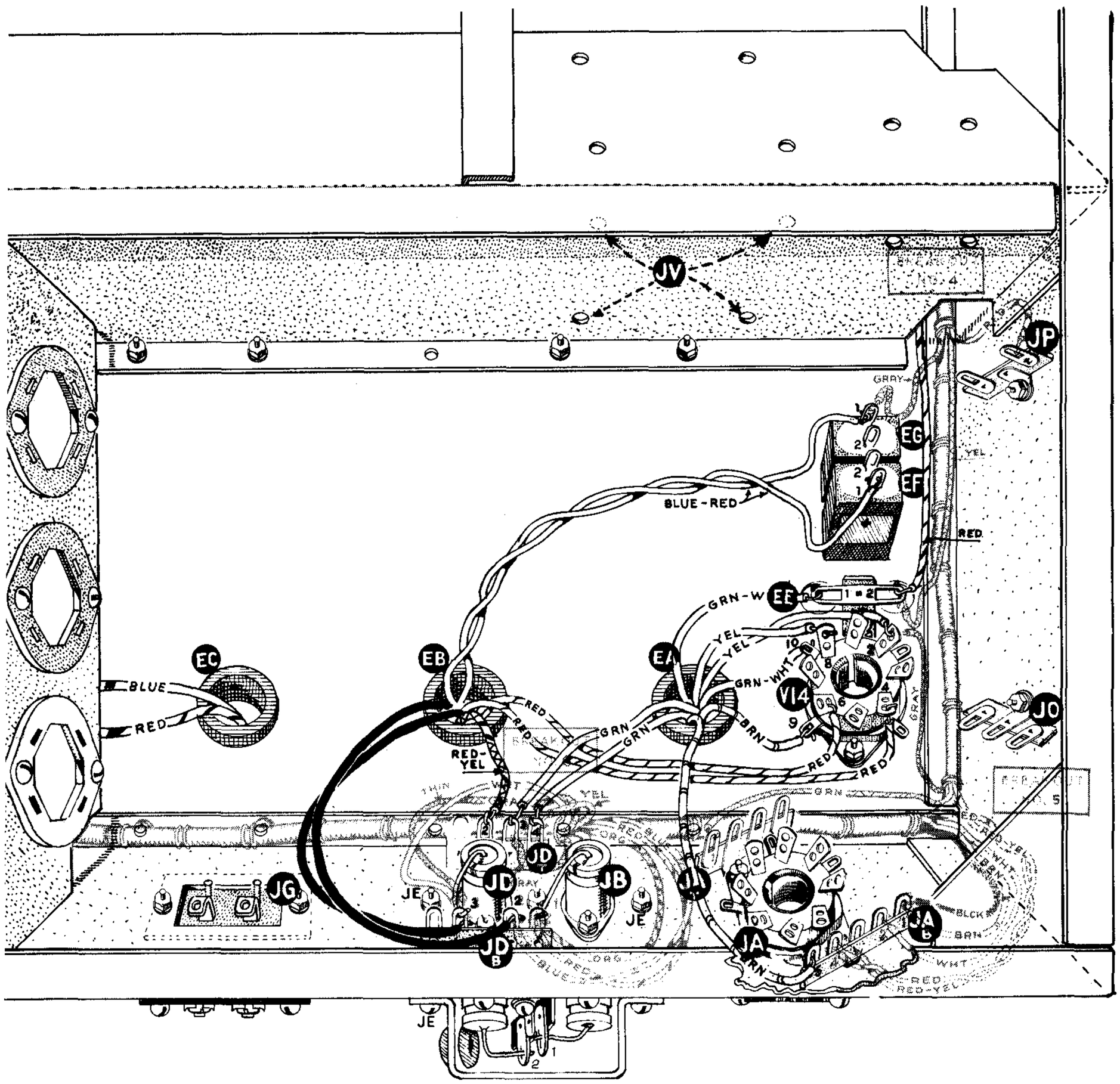

( ) Connect the other brown lead from EA to terminal strip JA_b-5 (NS).

( ) Connect one of the green leads from EA to JD_t-3 (S2).

( ) Connect the other green lead from EA to JD_t-4 (S2).

( ) Connect one of the red-blue leads from grommet EB to lug 1 (+) of EG (S2).

( ) Connect the other red-blue lead from EB to lug 1 (+) of EF (S1).

( ) Connect one of the red leads from EB to V14-6 (S1).

( ) Connect the other red lead from EB to V14-4 (S1).

( ) Connect the red-yellow lead from EB to JD_t-2 (NS).

( ) Connect one of the black leads from EB to JD_b-2 (NS).

( ) Connect the other black lead from EB to JD_b-3 (NS).

( ) Connect the blue lead from grommet EC to V16-2 (NS). Route along chassis between the filter capacitor mounting bracket and the chassis.

( ) Connect the red lead from EC to bleeder resistor lug 1 (NS). Route between filter capacitor mounting bracket and chassis.

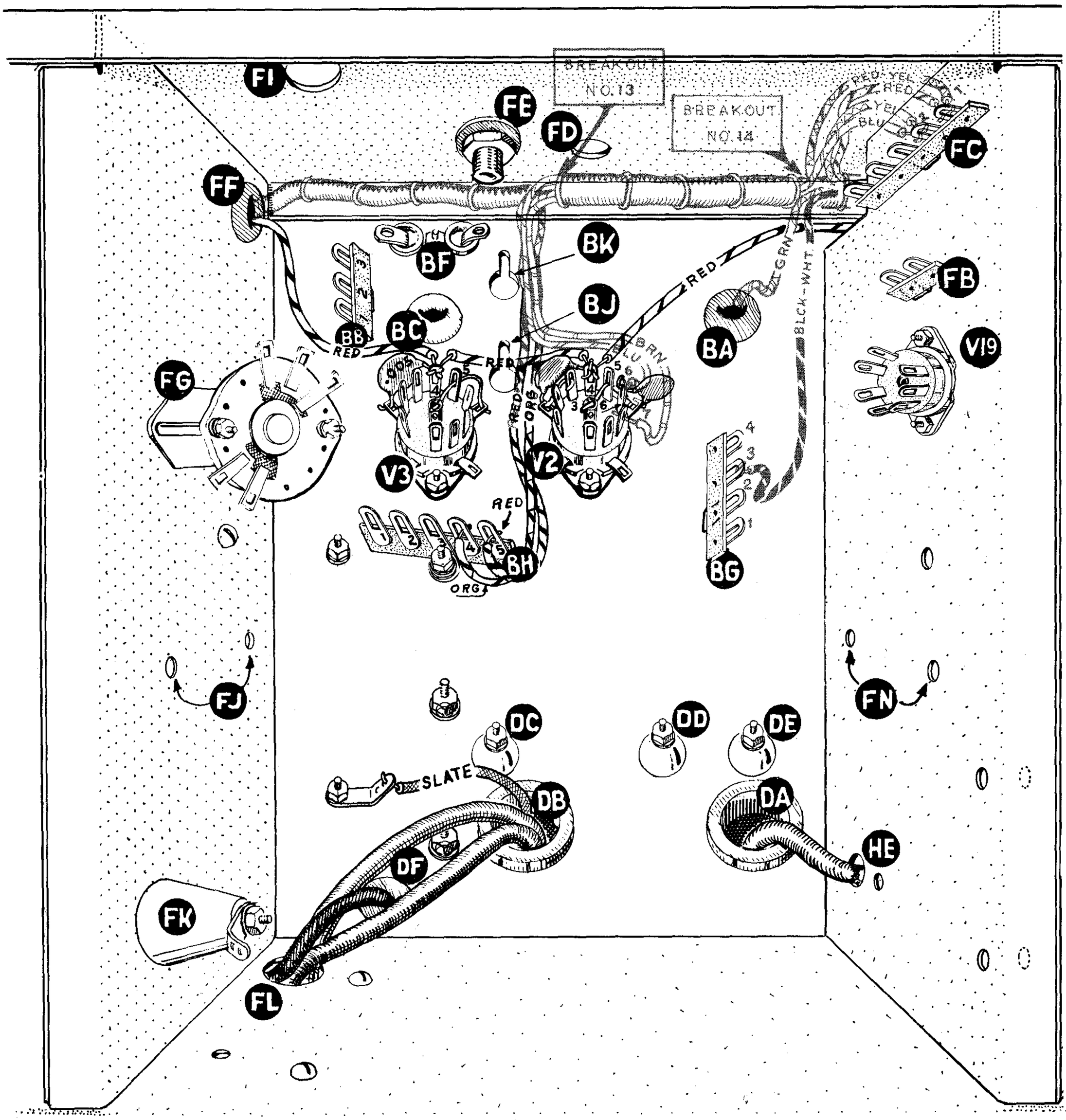

Pictorial 13

( ) Connect the red-yellow lead from grommet ED to JS-3 (NS).

( ) Connect one of the black leads from ED to terminal strip JM-4 (NS).

( ) Connect the other black lead from ED to JM-3 (NS).

( ) Connect one of the red leads from ED to V15-4 (NS).

( ) Connect the other red lead from ED to V15-6 (NS).

( ) Pass the blue and brown leads from grommet DA in the exciter compartment through adjacent hole HE in the partition. Cut a length of 3/16" spirashield 1 1/2" long, slide it over both wires, through hole HE down to the transformer. Now connect the blue lead to V12-3 (S1) and the brown lead to V11-3 (S1). Refer to the Pictorials 13 and 14.

( ) Connect the slate lead from grommet DB to the near solder lug under the final amplifier shield spade lug mounting screw (S1).

( ) Cut a 3" length of 3/16" spirashield and slide over the red and black wires from grommet DB and push down to the transformer. Pass the wires through hole FL in the partition and connect the black lead to terminal strip JW-1 (NS). Leave the red lead free temporarily. Refer to Pictorials 12 and 13.

( ) Cut a second 3" length of 3/16" spirashield and slide over the yellow and green leads from DB and push down to the transformer. Pass these leads through hole FL and connect the yellow lead to JW-2 (NS) and the green lead to JW-3 (S1).

( ) In the power supply compartment, referring to Pictorial 12, using #18 hookup wire, connect V16-8 (S2) to V15-2 (S1).

( ) Connect V16-2 (S3) to V15-8 (S1) using #18 hookup wire.

( ) Using #18 hookup wire, connect a wire from EE-2 (S2) to V9-5 (NS). Refer to Pictorials 12 and 14.

( ) Using #22 red hookup wire, connect one end of the wire through V9-4 (S1) to V9-5 (NS). Connect the other end to V8-5 (NS).

( ) Using #22 red hookup wire, connect one end of the wire through V8-4 (NS) to V8-5 (S2) and the other end through V7-5 (S1) to V7-4 (S1).

( ) Using #22 red hookup wire, connect V8-4 (S2) to V10-4 (S1).

( ) Using #18 hookup wire, connect V9-5 (S3) to V12-2 (NS).

( ) Using #18 hookup wire, connect V12-2 (S2) to V11-7 (NS).

( ) Using #18 hookup wire, connect one end to V11-7 (S2) and run the other end down the center partition next to the top plate to the cable harness notch, through the notch to the exciter compartment (see pictorials 13 and 14) to V2-4 (NS).

( ) Pass a #20 bare wire through V3 center post, through lug V3-5 to the near ground lug on the socket and solder all three connections.

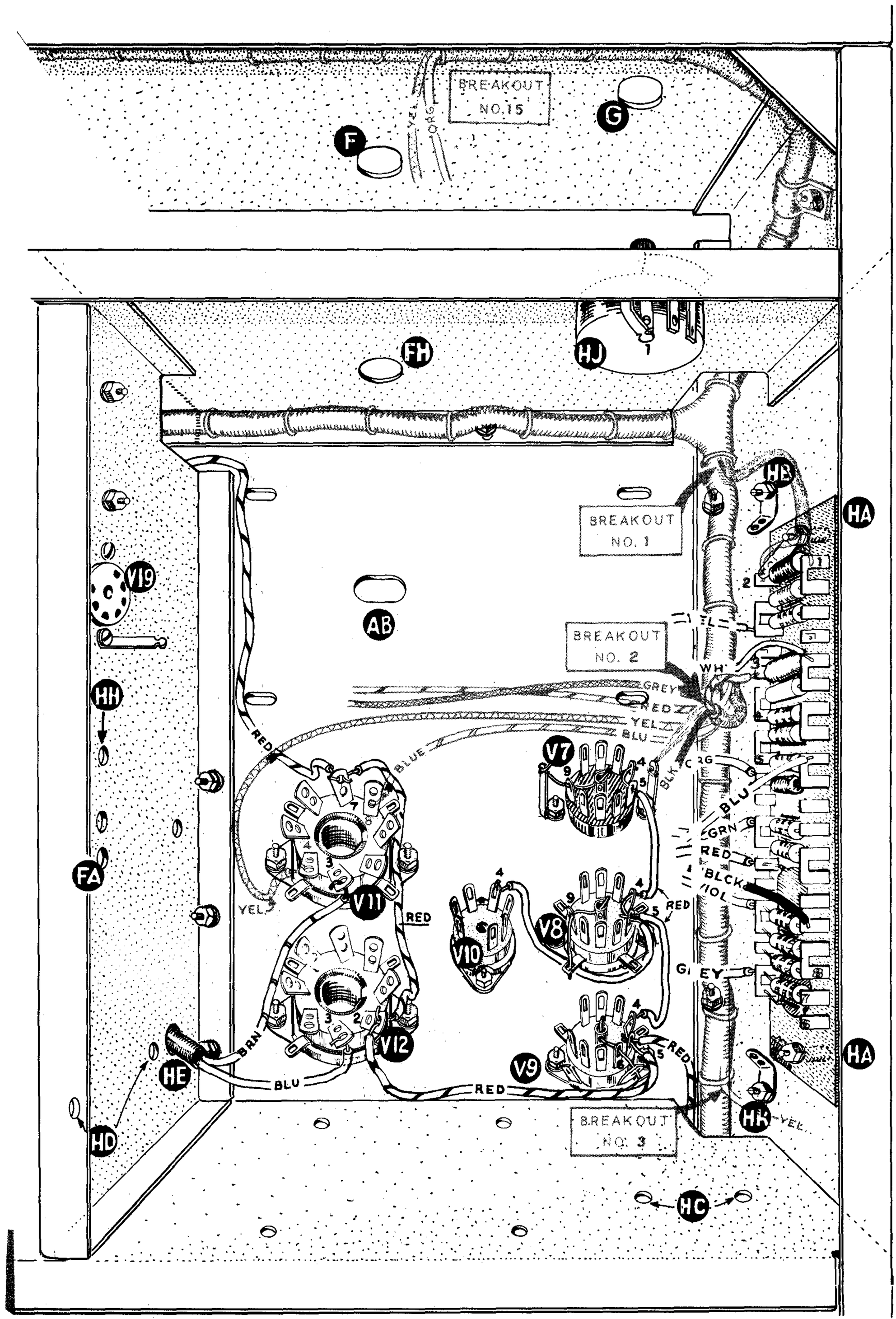

Pictorial 14

( ) Using #18 hookup wire, connect V2-4 (NS) to V3-4 (NS).

( ) Connect a .005 mf disc capacitor between V3-4 (NS) and the near socket ground lug (S1).

( ) Using #18 hookup wire, connect one end to V3-4 (S3) and pass the other end through the cable harness grommet FF, run down the partition along the top plate and connect to V4-4 (NS). Refer to Pictorials 13 and 15.

( ) Connect a .005 mf disc capacitor between V4-4 (S3) and V4-3 (NS).

( ) Using #20 bare wire, connect one end to mode switch lug GD-18 (S1). Pass the other end through V4-3 (NS) and V4-2 (NS) to terminal strip CK-2 (NS). Dress the wire close to the top plate. Now solder V4-3 (S2) and V4-2 (S1).

( ) Connect a .005 mf disc capacitor between CK-1 (NS) and CK-2 (NS).
( ) Connect a .1 ohm precision resistor between CK-1 (S4) and CK-2 (S3).

( ) Referring to Pictorial 13, connect one lead of a .005 mf disc capacitor to V2-4 (S3). Pass the other lead through the near socket ground lug (NS), then to V2-3 (S1). Now solder the ground lug (S1).

( ) Connect one lead of a .005 mf disc capacitor to V2-6 (S2). Pass the other lead through the near socket ground lug (NS), through V2-5 (NS) to the socket center post. Now solder all three connections.

( ) Referring to Pictorial 14, connect a #20 bare wire from the small solder lug at V7, through V7-9, to the V-7 center post. Solder V7-9 only.

( ) Connect a #20 bare wire from the V-8 center post through lug V8-9 to the near socket ground lug and solder all three connections.

( ) Connect a #20 bare wire from the V9 center post through lug V9-6 to the near socket ground lug and solder all three connections.

( ) In the exciter compartment connect the free red wire from BO-13 to BH-5 (NS) and the orange wire to BH-4 (NS).

FINAL WIRING IN THE POWER SUPPLY COMPARTMENT

Refer to Pictorial 16 for the following steps.

( ) Connect the negative lead of a 20 mf, 150 V electrolytic capacitor to JP-1 (NS). Pass the positive lead through JO-3 (NS) to JO-2 (NS). Now solder JO-3 (S1).

( ) Connect the negative lead of the second 20 mf, 150 V electrolytic capacitor to JP-2 (NS). Pass the positive lead through JO-1 (NS) to JO-2 (S2). Now solder JO-1 (S1).

( ) Pass one end of a short length of red hookup wire through EF-2 (NS) to EG-2 (S1). Connect the other end to JP-1 (NS). Now solder EF-2 (S1).

( ) Connect a 1 K ohm, 1 watt resistor (brown-black-red) between JP-1 (S3) and JP-2 (S3).

( ) Connect a blue wire between JD_b-2 (S3) and JA_t-4 (NS).

NOTE: Since the area available for placement of the following capacitors and the following chokes is somewhat restricted, follow the pictorial carefully, keeping leads as short as possible and following placement closely.

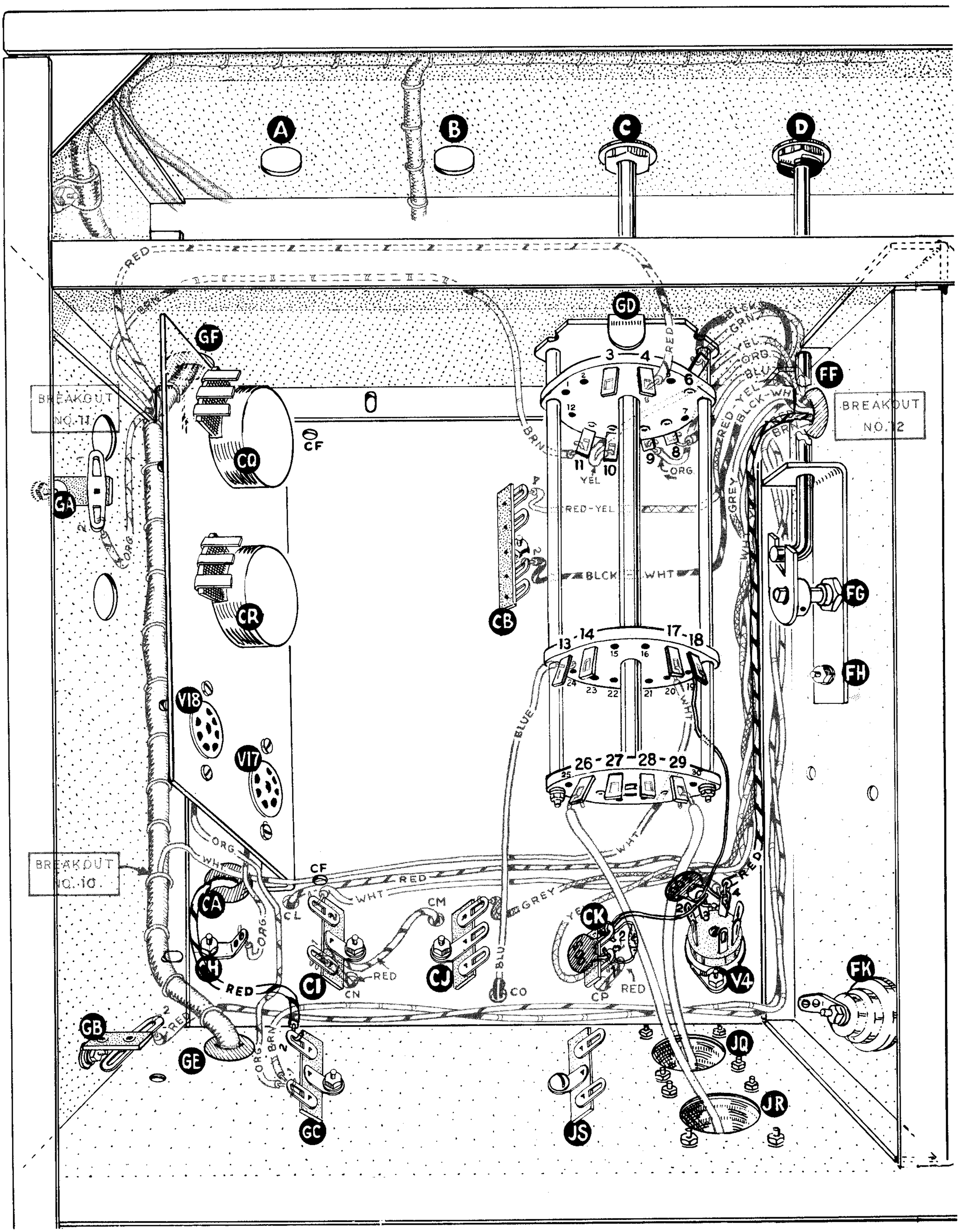

Pictorial 15

( ) Connect an orange wire between JD_b-3 (S5) and JA_t-3 (NS).

( ) Connect a .005 mf disc capacitor between JA_t-1 (NS) and JA_t-2 (NS).

( ) Connect a .005 mf disc capacitor between JA_t-3 (NS) and JA_t-2 (NS).

( ) Connect a .005 mf disc capacitor between JA_t-4 (NS) and JA_t-2 (S3).

( ) Connect a .005 mf disc capacitor between JA_b-1 (NS) and JA_b-3 (NS).

( ) Connect a .005 mf disc capacitor between JA_b-2 (NS) and JA_b-3 (NS).

( ) Connect a .005 mf disc capacitor between JA_b-4 (NS) and JA_b-3 (NS).

( ) Connect a .005 mf disc capacitor between JA_b-5 (NS) and JA_b-3 (S4).

( ) Bend JA-8 to touch the near socket ground lug and solder.

( ) Connect a small line choke, 45-28, between JA_t-4 (S3) and JA-3 (S1).

( ) Connect a large line choke, 45-17, between JA_t-3 (S3) and JA-2 (S1).

( ) Connect a large line choke, 45-17, between JA_b-1 (S4) and JA-4 (S1).

( ) Connect a small line choke, 45-28, between JA_t-1 (S3) and JA-1 (S1).

( ) Connect a small line choke, 45-28, between JA_b-2 (S3) and JA-5 (S1).

( ) Connect a small line choke, 45-28, between JA_b-4 (S4) and JA-6 (S1).

( ) Connect a large line choke, 45-17, between JA_b-5 (S3) and JA-7 (S1).

( ) Using orange hookup wire, connect lug 1 of the relay (S1) to JD_t-1 (NS).

( ) Using blue hookup wire, connect lug 3 of the relay (S1) to JD_b-4 (NS).

( ) Connect a .005 mf disc capacitor between JD_t-1 (NS) and JD_t-2 (NS).

( ) Connect a .005 mf disc capacitor between JD_b-4 (NS) and JD_t-2 (S3).

( ) Connect a small line choke, 45-28, between JD_t-1 (S3) and JG-2 (S1). Use sleeving.

( ) Connect a small line choke, 45-28, between JD_b-4 (S3) and JG-1 (S1). Use sleeving.

( ) Using blue hookup wire, connect JM-4 (S4) to relay lug 8 (S1).

( ) Using #20 bare wire, connect JM-3 (S3) to relay lug 7 (S1).

( ) Using #18 hookup wire, connect V15-4 (S2) to V16-6 (S1).

( ) Using #18 hookup wire, connect V15-6 (S2) to V16-4 (S1).

( ) Mount the VFO filament transformer, 54-37, at location JX. Remove the nut from the screw holding terminal strip GC, place transformer over screw in position and replace nut using a lockwasher. Secure the other mounting lug of the transformer with a #6-32 x 1/4" RHMS with nut and lockwasher. Remove coax cable clamp temporarily for access if necessary.

( ) Connect one of the black leads from transformer JX to JS-1 (S2).

( ) Connect the other black lead from JX to JS-2 (S2).

( ) Connect one of the yellow leads from JX to JS-3 (S2).
( ) Connect the other yellow lead from JX to JS-4 (S2).
( ) Mount the LV filter choke, 46-11, at location JV, orienting as shown in relation to the leads. Slip the #6 tinnerman nuts over the mounting lugs as shown in Figure 21. Using #6-32 x 3/8" RHMS, mount the choke, running the screws into the tinnerman nuts.
( ) Mount the 20-20-20 mfd, 450 V electrolytic capacitor on the metal wafer on the filter capacitor mounting bracket. Before mounting, cover the capacitor can with insulating tape, as shown, to prevent shorting to the terminals of JG. Secure by twisting the four mounting tabs with long nose pliers. Orient with the blank lug nearest the chassis top plate as shown. Connect the free gray wire from the harness to lug ▬, (NS), and the free red wire to lug ■ (NS).
( ) Route the red and black leads from the LV filter choke along the partition between the filter capacitor mounting bracket and the chassis top plate, then across to the capacitor. Connect the black lead to ▬, (S2) and the red lead to ■ (NS).

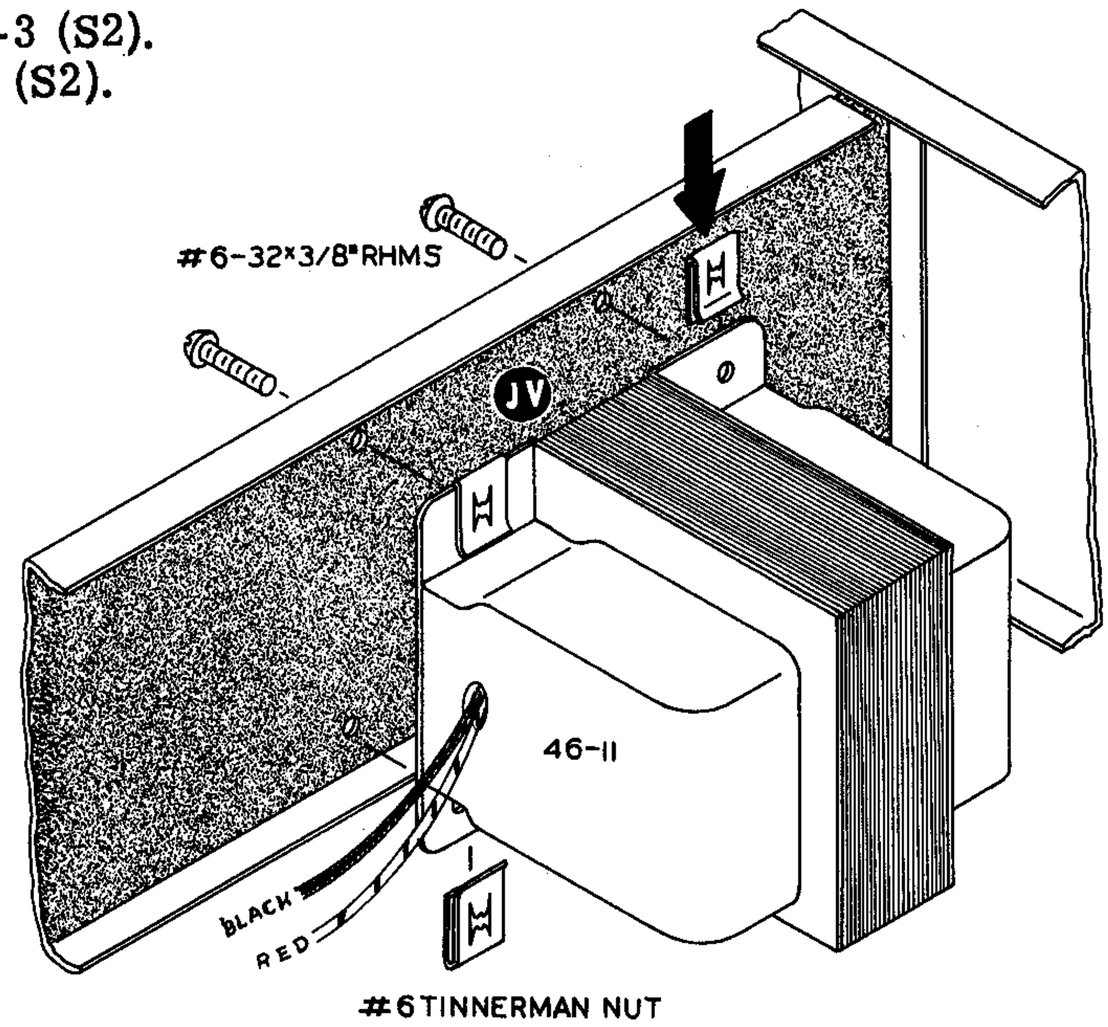

Figure 21

Pictorial 16

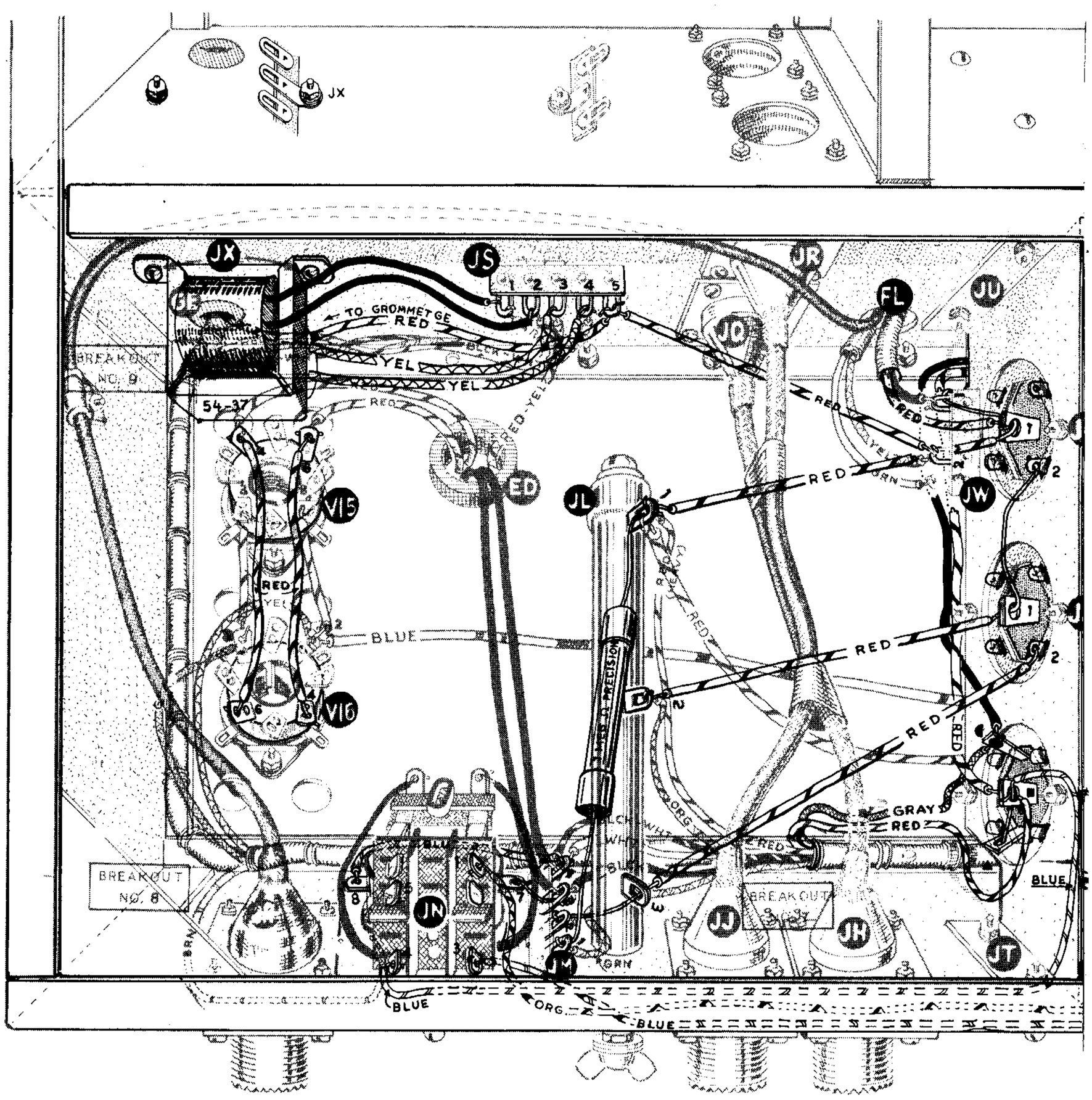

( ) Strip one end of a length of blue hookup wire for 1". Pass through lug ■ (NS) to lug ▲ (S1). Now solder lug ■ (S3). Connect the other end to lug 4 of the relay (S1).

( ) Using #18 hookup wire, connect JW-2 (S2) to JS-5 (NS).

( ) Mount the two 125 mfd, 450 V electrolytic capacitors, one on each insulated wafer on the filter capacitor mounting bracket. Orient with the single center lug nearest the chassis bottom. Designate the 125 mfd capacitor over terminal strip JW as JY, the other as JZ.

( ) Connect the free red lead coming through hole FL to lug 1 of JY (NS).

( ) Strip one end of a length of #18 hookup wire for a distance of 1 1/2". Pass the end through lug 1 of JY (NS) to JW-1 (S2). Connect the other end to lug 1 of the bleeder (NS). Now solder JY-1 (S2).

( ) Strip one end of a length of #18 hookup wire for a distance of 1 3/4". Pass the end through lug 1 of JZ (NS) to lug 2 (mounting tab) of JY (S1). Now solder JZ-1 (S1). Connect the other end to lug 2 of the bleeder (S2).

( ) Strip one end of a length of #18 hookup wire for a distance of 1 1/2". Pass this end through lug 3 of the bleeder (NS) to JM-2 (S1). Now solder lug 3 of the bleeder (S1). Connect the other end to lug 2 (mounting tab) of JZ (S1).

( ) Connect the 1 megohm precision resistor between lug 1 of the bleeder (S4) and JM-1 (S2).

( ) Make sure the bare portions of the above #18 wires do not touch any other circuit component or the chassis.

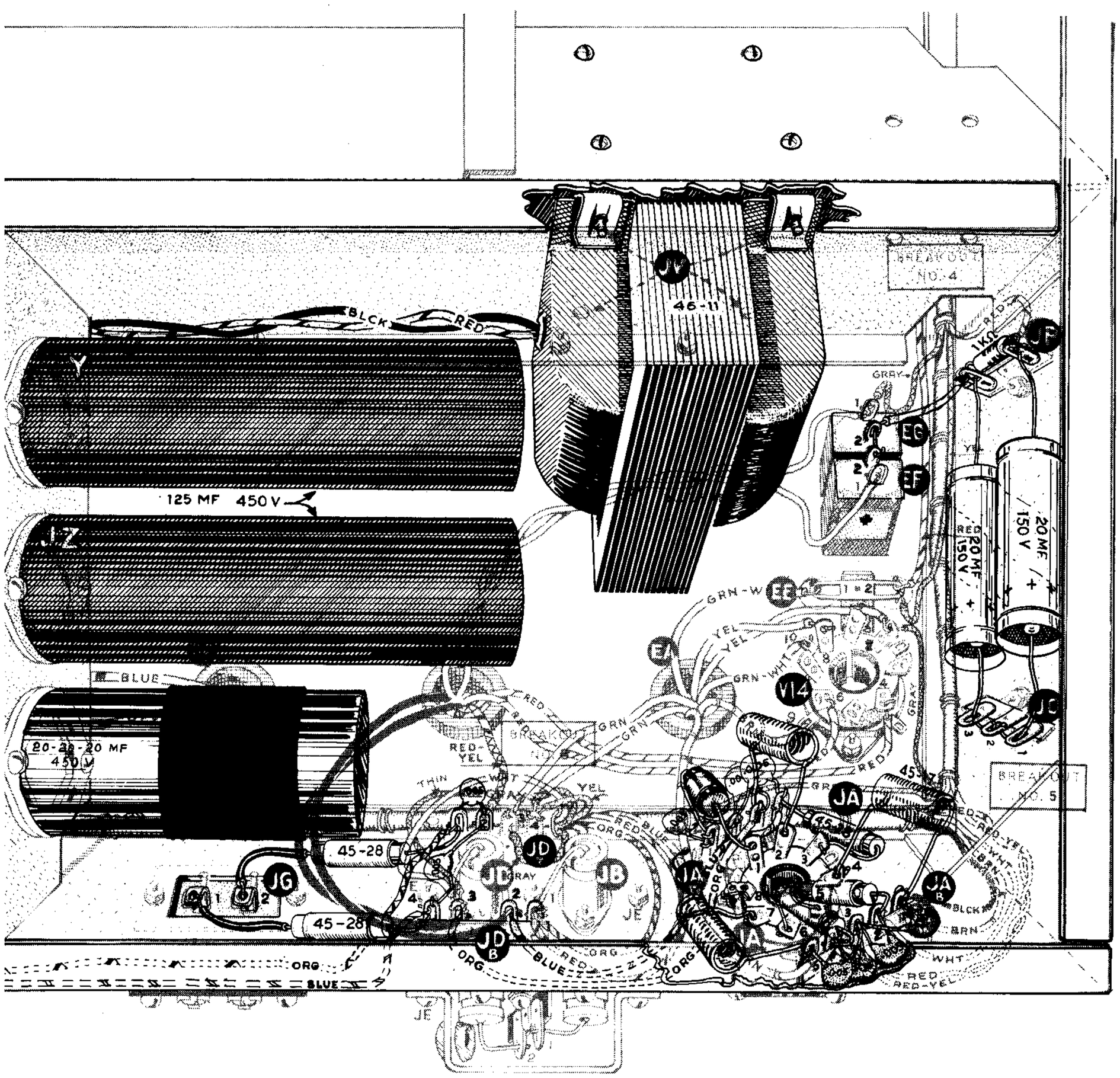

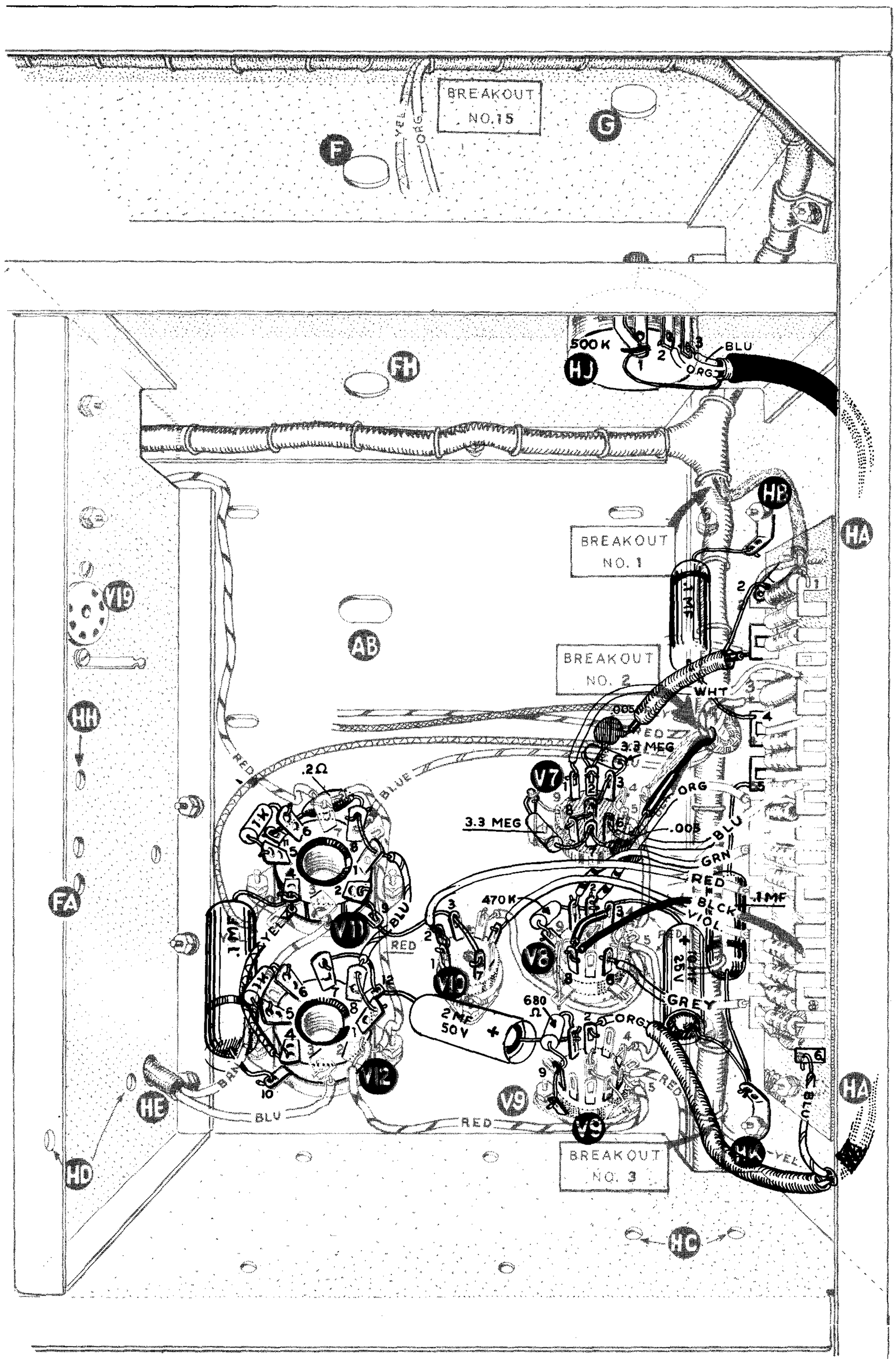

Pictorial 17

( ) Using #18 hookup wire, connect JS-5 (S2) to GC-2 (NS) in the final amplifier grid circuit compartment. Pass the wire through grommet GE. Refer to Pictorials 16 and 22 for routing of wire.

This completes wiring in the power supply compartment. Re-check your work carefully for short circuits or wiring errors.

WIRING IN THE MODULATOR COMPARTMENT

Refer to Pictorial 17 for the following steps.

( ) Cut one lead of a 3.3 megohm (orange-orange-green) 1/2 watt resistor to 1/2" and connect to V7-2 (NS). Pass the other lead through V7-3 (NS), through the socket center post (NS), to V7-8 (NS). Now solder the center post, V7-8 and V7-3.

( ) Connect a second 3.3 megohm (orange-orange-green) 1/2 watt resistor between V7-7 (NS) and the solder lug next to V7-9. Now solder the entire connection at the solder lug (S2).

( ) Unsolder the yellow lead from its terminal on the component strip pack.

( ) Cut one lead of a .005 mf disc capacitor to 1/2" and connect to V7-2 (S2). Cut the other lead to 1 3/4". Slip a 1 5/8" length of insulated sleeving over the lead followed by a 1 1/2" length of 1/8" spirashield. Now connect the capacitor lead to the terminal on the strip pack from which the yellow wire was removed (S) and solder the spirashield to the strip pack ground lug as shown.

( ) Cut the leads of a .005 mf disc capacitor to 3/8". Connect one lead to V7-7 (S2). Slip a 1/2" length of insulated sleeving over the free black wire of the two conductor shielded wire. Now solder the remaining lead of the capacitor to the black wire and slide the sleeving over the connection.

( ) Connect the positive lead of a 2 mf, 50 V electrolytic capacitor to V9-1 (NS). Pass the other lead through ground lug V12-12 (NS) to V12-7 (S1). Now solder V12-12 (S1).

( ) Pass one lead of a 680 ohm (blue-gray-brown) 1/2 watt resistor through V9-9 (NS) to the near socket ground lug (S1). Connect the other lead to V9-1 (S2). Now solder V9-9 (S1).

( ) Connect a 470 K ohm (yellow-violet-yellow) 1/2 watt resistor between V8-2 (NS) and the near socket ground lug (S1).

( ) Pass a #20 bare wire through V10-3 (NS) to V10-7 (S1). Now solder V10-3 (S1). Pass the other end through ground lug V11-9 (NS) to V11-2 (S1). Now solder V11-9 (S1).

( ) Pass one end of a length of blue hookup wire through V12-8 (NS) to V12-1 (S1). Now solder V12-8 (S1). Pass the other end through V11-1 (NS) to V11-8 (NS). Now solder V11-1 (S1).

( ) Connect a .2 ohm precision resistor between V11-8 (S3) and socket ground lug V11-11 (S1).

( ) Using yellow hookup wire, connect V11-4 (NS) to V12-4 (S1).

( ) Connect the negative end (with black band) of a .1 mf 600 V capacitor to V12-10 (S1). Connect the other end to V11-4 (S3). Position capacitor under the blue and brown wires from hole HE and close against the chassis.

( ) Connect a 1 K ohm (brown-black-red) 1/2 watt resistor between V12-5 (S1) and V12-6 (NS).

( ) Connect a 1 K ohm (brown-black-red) 1/2 watt resistor between V11-5 (S1) and V11-6 (NS).

( ) Connect the negative lead (band) of a .1 mf, 400 V capacitor to solder lug HB (S1) and the other lead to lug 4 of the strip pack (S1). Position against the chassis as shown.

( ) Connect the negative lead (black band) of a second .1 mf, 400 V capacitor to solder lug HK (NS) and the other lead to lug 5 of the strip pack (S1). This is the lug next to the orange lead. Position against the chassis as shown.

( ) Cut 8 3/4" length of 1/8" ID spirashield and pass a length of orange hookup wire through the shield, leaving 1/2" of wire extending from each end. Strip these ends of the orange wire for 1/4".

( ) At a point 2 3/4" from one end of the shield, bend the shield to open a gap. Insert a length of blue hookup wire through the shield gap and down the long portion of the shield. Leave 1/2" of the blue wire exposed at each end and strip 1/4". Slip a 6" length of 1/4" insulated sleeving over the long portion of the shield. Unwind 1" of shield wire at the end with the blue and orange wires, as shown.

( ) At the end with the blue and orange wires and the shield pigtail, connect the orange wire to control lug HJ-2 (S1) and the blue wire to HJ-3 (S1). Connect the shield through HJ-1 (NS) to the control ground lug (S1). Now solder HJ-1 (S1).

( ) Connect the blue wire breaking out of the shield to lug 6 of the strip pack (S1), routing the cable as shown.

( ) Connect the other end of the orange wire to V9-2 (S1), routing the cable as shown.

( ) Connect the negative lead of a 10 mf, 25 V electrolytic to solder lug HK (S2). Position the capacitor as shown and, using sleeving, pass the other lead through V8-3 (S1) and then, using sleeving, to V8-8 (NS).

( ) Connect the leads from the strip pack as follows: white to V7-1 (S1); blue to V7-6 (S1); orange to V8-2 (S2); green to V8-1 (S1); red through V10-2 (NS) to V10-1 (NS); violet to V10-5 (S1); black to V8-8 (S2); and gray to V8-6 (S1). Now solder V10-2 (S1).

( ) Locate the modulator driver transformer, 51-23, and cut one green lead to a length of 3" and the other green lead to 4". Strip and tin. Referring to Pictorial 18, pass a #6-32 x 1/2" RHMS through each mounting lug and secure the mounting screws to the transformer with two nuts on each screw.

( ) Solder the 4" green lead to V11-6 (S2), and the 3" green lead to V12-6 (S2).

( ) Orient the black and one blue lead so they run toward the socket V19 and run the remaining blue lead along the chassis toward V9. Now mount the driver transformer at location HD. Secure with #6 nuts and lockwashers on the exciter compartment side.

( ) Connect the blue lead from the driver transformer through V9-8 (NS) to V9-7 (S1). Now solder V9-8 (S1).

( ) Connect one end of a 12" length of red hookup wire and the free red-yellow harness wire to strip pack lug 7 (S2). Use a solid "tacking" type connection. Dress the red lead under the driver transformer to hole FA and leave free temporarily.

( ) Locate the audio filter mounting bracket. This is the small L shaped bracket illustrated in Figure 22. As shown, mount the audio choke, 46-4, on the face with the three holes, using #3-48 x 1/4" PHMS. Pass the choke leads through the center hole. Mount a 2 lug, (no ground) terminal strip on the mounting screw near the bend. Clip the mounting lug of the terminal strip with wire cutters for clearance. Mount a 1 lug (no ground) terminal strip on the other mounting screw.

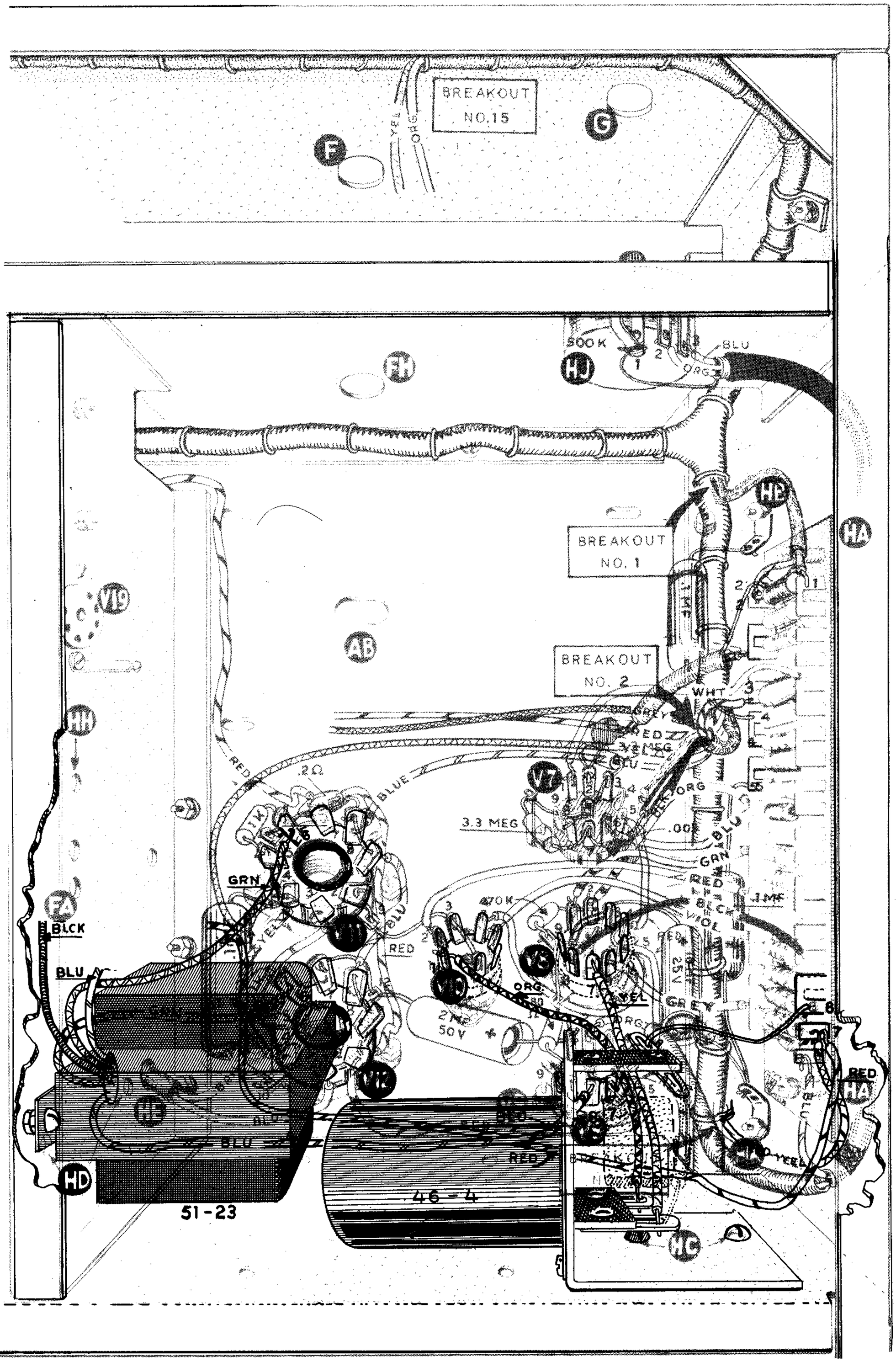

Pictorial 18

( ) Connect one lead from the choke to lug 1 of the 2 lug strip (NS).

( ) Connect the other lead from the choke to lug 2 of the 2 lug strip (NS).

( ) Pass a #6-32 x 3/8" RHMS through the mounting hole near the bend from the inside of the bracket.

( ) Connect a 200 mmf (red-black-brown) mica capacitor between lug 1 (NS) and lug 2 (NS) of the 2-lug terminal strip, positioning as shown to hold the #6 screw in place.

( ) Connect a 270 mmf mica capacitor between lug 1 of the 2 lug terminal strip (NS) and lug 1 of the 1 lug strip (S1).

( ) Connect a 270 mmf mica capacitor between lug 2 of the 2 lug terminal strip (NS) and lug 2 of the 1 lug strip (NS).

( ) Connect a 100K ohm (brown-black-yellow) 1/2 watt resistor between lug 1 of the 2 lug strip (NS) and lug 2 of the 1 lug strip (NS).

( ) Cut a 1" length of #20 bare wire and connect one end to lug 2 of the 1 lug terminal strip (S3) on the audio filter mounting bracket.

( ) Cut and strip the ends of a 2 3/4" length of yellow hookup wire and connect one end to lug 1 of the 2 lug terminal strip (S5).

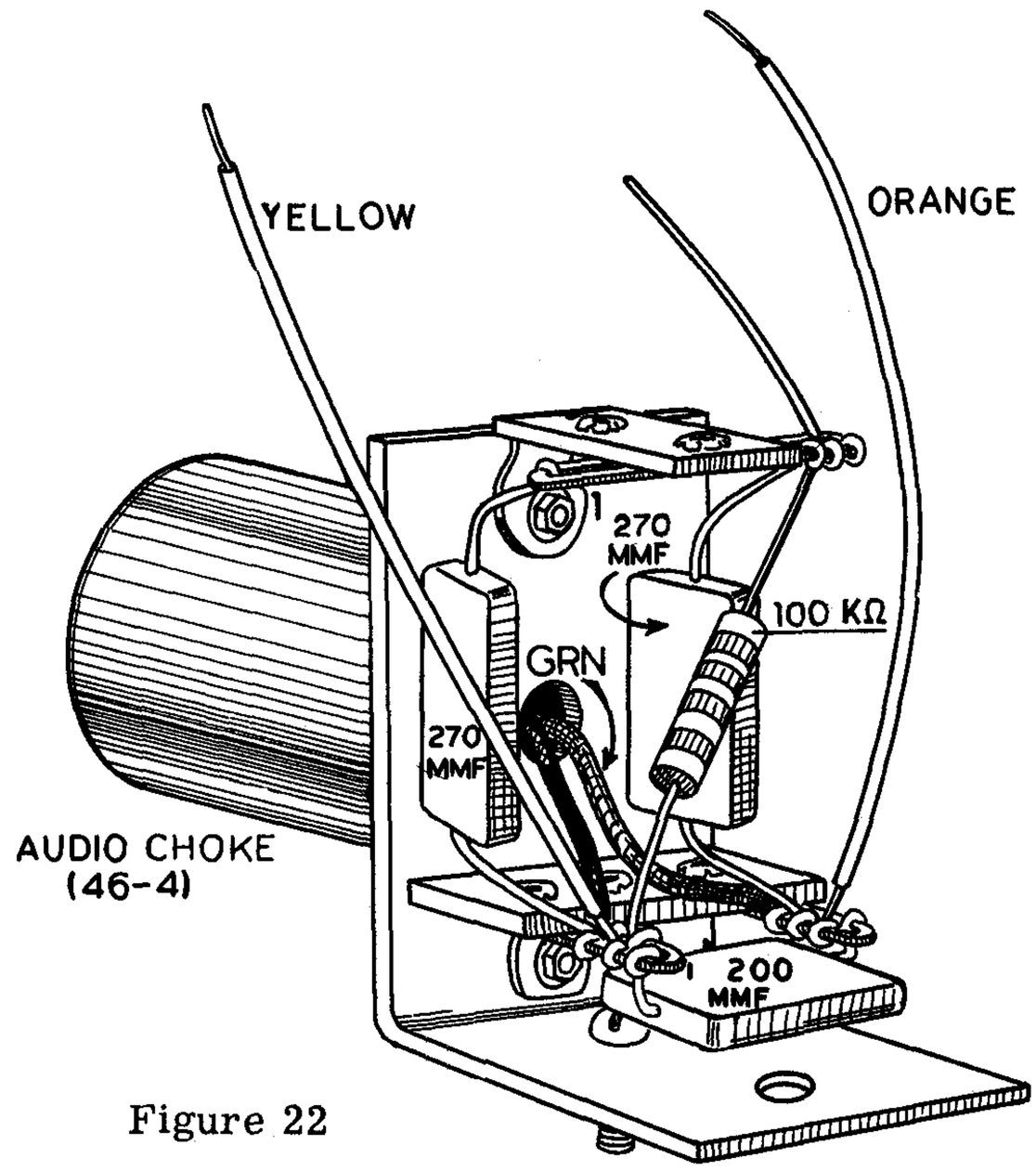

Figure 22

( ) Cut and strip the ends of a 3" length of orange hookup wire and connect one end to lug 2 of the 2-lug terminal strip (S4).

( ) Connect the yellow wire from the audio filter assembly to V8-7 (S1).

( ) Now mount the filter assembly at location HC, positioning as shown in Pictorial 18. Use #6-32 x 3/8" RHMS with lockwashers.

( ) Connect the bare wire from the filter assembly to lug 8 of the strip pack (S).

( ) Connect the orange wire from the filter assembly to V10-1 (S2).

Final wiring in the modulator compartment will be completed after final wiring of the exciter.

FINAL WIRING IN THE EXCITER COMPARTMENT

Refer to Pictorial 19 for the following steps.

( ) Connect a 47 K ohm (yellow-violet-orange) 1/2 watt resistor between FC-2 (NS) and FC-1 (S3).

( ) Connect a 33 K ohm (orange-orange-orange) 1/2 watt resistor between FC-2 (NS) and FC-4 (NS).

( ) Connect an NE-2 neon bulb between FC-4 (NS) and FC-5 (NS).

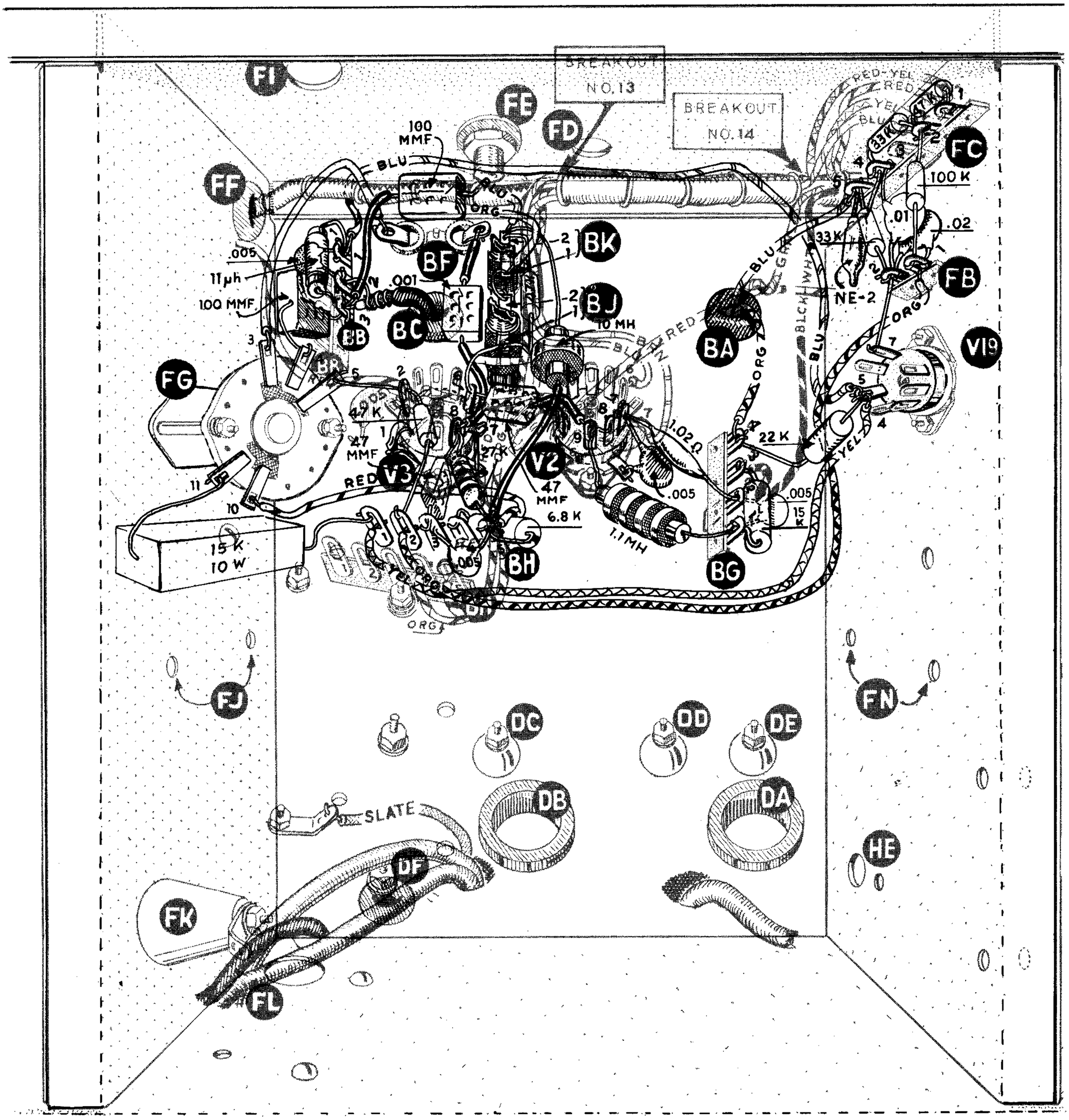

Pictorial 19

( ) Connect a .02 mf disc capacitor between FB-1 (NS) and FB-2 (NS).

( ) Connect one lead of a .01 mf disc capacitor to FC-4 (S3). Pass the other lead through FB-2 (NS) to tube socket V19-7 (S1).

( ) Connect a 100 K ohm (brown-black-yellow) 1/2 watt resistor between FC-2 (S5) and FB-1 (NS).

( ) Connect a 33 K ohm (orange-orange-orange) 1/2 watt resistor between FC-5 (NS) and FB-2 (S3).

( ) Connect an orange hookup wire between FB-1 (S3) and BH-2 (NS), routing as shown.

( ) Connect a blue hookup wire between V19-5 (NS) and BB-1 (NS). Route as shown along inner front partition.

( ) Connect a yellow hookup wire between V19-5 (NS) and BH-1 (NS), routing along the orange wire.

( ) Connect one end of a 6" length of blue hookup wire to FC-5 (S3). Pass the other end through grommet BA and leave free temporarily.

( ) Connect a 22 K ohm (red-red-orange) 1 watt resistor between V19-5 (S3) and BG-4 (NS). Position as shown.

( ) Connect one end of a 5" length of orange wire to BG-4 (S2). Pass the other end through grommet BA and leave free temporarily.

( ) Using red hookup wire, connect BH-5 (NS) to switch lug FG-10 (S1).

( ) Connect a 15 K ohm, 10 watt resistor between BH -1 (S2) and FG-11 (S1). Position vertically, as shown against the center partition.

( ) Connect a .005 mf disc capacitor between V2-7 (NS) and the near unused socket ground lug (S1).

( ) Connect a 1.02 ohm precision resistor between V2-7 (S3) and BG-2 (NS).

( ) Pass one lead of a 1.1 mh RFC through V2-9 (NS) to V2-8 (NS). Connect the other lead to BG-1 (NS).

( ) Connect a .005 mf disc capacitor between BG-1 (NS) and BG-2 (S2).

( ) Connect a 15 K ohm (brown-green-orange) 1 watt resistor between BG-1 (S3) and BG-3 (S2).

( ) Connect a .005 mf disc capacitor between BH-5 (NS) and BH-3 (NS). Position as shown.

( ) Connect a 6.8 K ohm (blue-gray-red) 2 watt resistor between BH-4 (S2) and BH-5 (NS).

( ) Using a short #20 bare wire connect V3-7 (S1) to the near unused ground lug (S1).

( ) Connect a 27 K ohm (red-violet-orange) 1 watt resistor between BH-5 (NS) and V3-8 (NS).

( ) Connect a 47 mmf (yellow-violet-black) mica capacitor between V3-8 (NS) and BH-3 (S2).

( ) Bend V3-1 to touch the near socket ground lug and solder.

( ) Pass one end of a 47 K (yellow-violet-orange) 1/2 watt resistor through V3-2 (NS) to FG-5 (NS). Connect the other end to BH-2 (S2). Now solder FG-5 (S1) and V3-2 (S1).

( ) Connect a .005 mf disc capacitor between BB-1 (NS) and BB-2 (NS).

( ) Connect the small 11 uh RFC, 45-31, between BB-1 (S3) and BB-3 (NS). Position as shown.

( ) Connect a 100 mmf (brown-black-brown) mica capacitor between BB-3 (NS) and FG-4 (S1).

( ) Using orange hookup wire, connect FG-3 (S1) to crystal socket BF-1 (S1).

( ) Cut a length of coaxial cable 10 3/4" long, cutting fairly accurately as the length is somewhat critical, and prepare the ends of the cable as shown in Figure 23. At one end, strip off 1" of the outer sheath and cut the braid off about 3/8" from the sheath. Strip the center conductor to within 1/4" of the outer sheath and tin. Now insert center conductor into a phono plug and solder the tip. Slip the braid over the plug shell and solder. At the other end, strip away 3/4" of the outer sheath and cut the braid to within 1/4" of the sheath. Wrap a short length of #20 bare wire around the braid and solder, leaving a 1" pigtail. Strip and tin 1/4" of the center conductor.

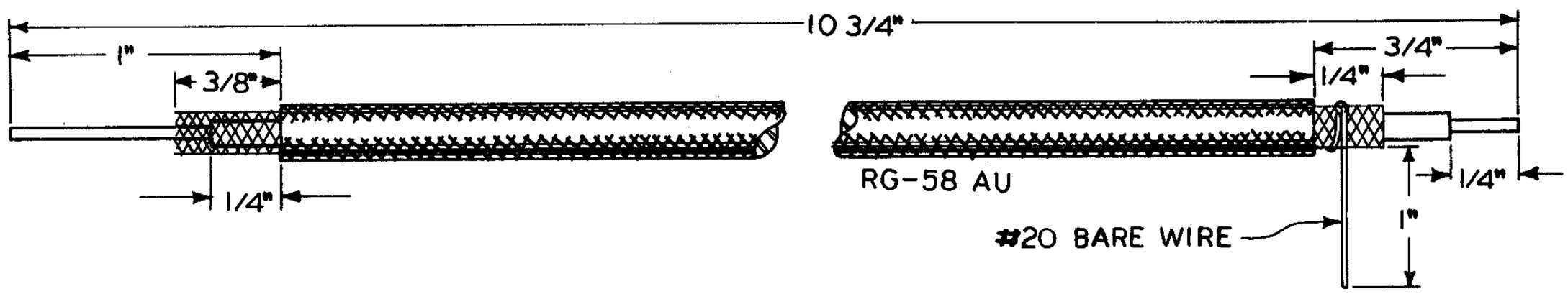

Figure 23

( ) Pass the end of the coax with the shield pigtail through grommet BC and connect the center conductor to BB-3 (NS) and the pigtail to BB-2 (S2).

( ) Insert the 15 uh slug tuned buffer coil, 40-63, in the hole BK, observing the locating lug position, until the clips snap into place. Insert the 6.5 uh slug tuned buffer coil, 40-62, into hole BJ in a similar manner. The 15 uh coil has a long winding and the 6.5 uh coil has a short winding.

( ) Connect a .001 mfd mica (brown-black-red) capacitor between V3-8 (S3) and crystal socket BF-2 (S1). Use sleeving and position as shown against the chassis.

( ) Connect a 47 K ohm (yellow-violet-orange) 1/2 watt resistor between coil BJ-1 (NS) and BK-2 (NS).

( ) Using #20 bare wire, connect BJ-2 (S1) to BK-1 (NS).

( ) Cut to 3/4" and pass one lead of a 47 mmf (yellow-violet-black) mica capacitor through V3-6 (NS) to BJ-1 (S2). Now solder V3-6 (S1). Connect the other lead to V2-9 (S2). Use sleeving and bend V2-2 down out of the way. Now solder V2-8 (S1). Position capacitor close to chassis.

( ) Connect a 10 mh RFC between BH-5 (NS) and coil BK-2 (NS). Use sleeving as shown.

( ) Cut and strip the ends of a 2 1/4" length of blue hookup wire. Connect one end to BK-2 (S3) and leave the other free temporarily.

( ) Cut and strip the ends of a 1 1/4" length of orange hookup wire. Connect one end to BK-1 (S2) and leave the other end free temporarily.

( ) Connect one lead of a 100 mmf (brown-black-brown) mica capacitor to BB-3 (S4), using sleeving, and position as shown over the bottom of the crystal socket. Leave the other end free temporarily.

( ) Cut and strip the ends of a 4 1/2" length of yellow wire and connect one end to V2-1 (S1). Leave the other end free temporarily.

( ) Cut and strip the ends of a 5 1/4" length of red wire and connect one end to BH-5 (S7). Leave the other end free temporarily.

( ) Locate the driver shield partition which is the rectangular piece with flanges on each end. Referring to Figure 24, insert 3/8" grommets in holes PA and PB.

( ) Locate the exciter band switch marked 63-153. This is the wide spaced, small two-deck switch with no flat on the shaft. Carefully note the assembly and lug orientation of the rear deck on the switch studs. Remove the rear deck and hardware up to the nut on the studs between the spacers.

( ) Insert the switch studs and shaft through the mating holes on the shield partition at location PC, orienting the switch with the shield as shown in Figure 24. Now reassemble the rear deck and hardware exactly as it was before disassembly and secure.

( ) Using a pair of diagonal cutters or a small file, remove about 1/32" from the tip of the locating lug on the switch. This is to prevent it from protruding from the other side of the chassis after assembly and interfering with the mounting of the dial mechanism.

( ) Referring to Pictorial 20, install the exciter switch and shield partition assembly in the exciter compartment as shown. Insert the switch through hole FD in the inner front apron, seating the locating lug (no lockwasher is used). Check to see that the switch does not touch any components previously mounted. Now secure the partition with #6-32 x 1/4" RHMS through the mounting holes at FN and FJ. Use lockwashers under the nuts. Now place a 3/8" nut on the switch bushing and secure.

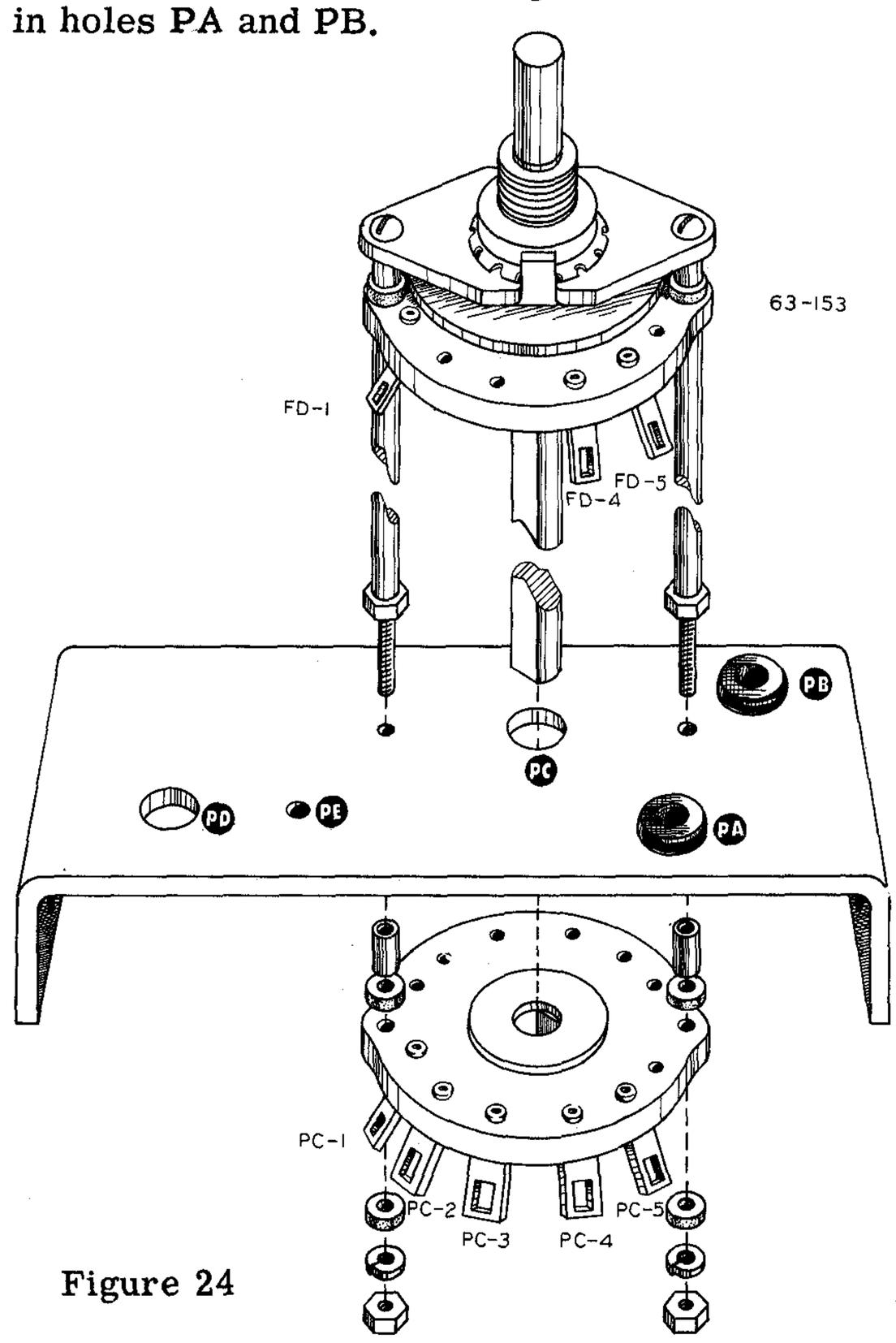

Figure 24

( ) Locate the 75 mmf variable capacitor and mount as shown in hole PD, using a control lockwasher and nut. Mount with the capacitor on the flanged side of the partition with the stator bars toward the grommets.

( ) Connect the free lead from the 100 mmf mica capacitor connected to BB-3 to switch lug FD-11 (S1). Use sleeving.

( ) Connect the free orange lead from BK-1 to FD-1 (S1).

( ) Connect the free blue lead from BK-2 to FD-4 (S1).

( ) Connect a .001 mf mica capacitor between FD-5 (S1) and FC-3 (S1).

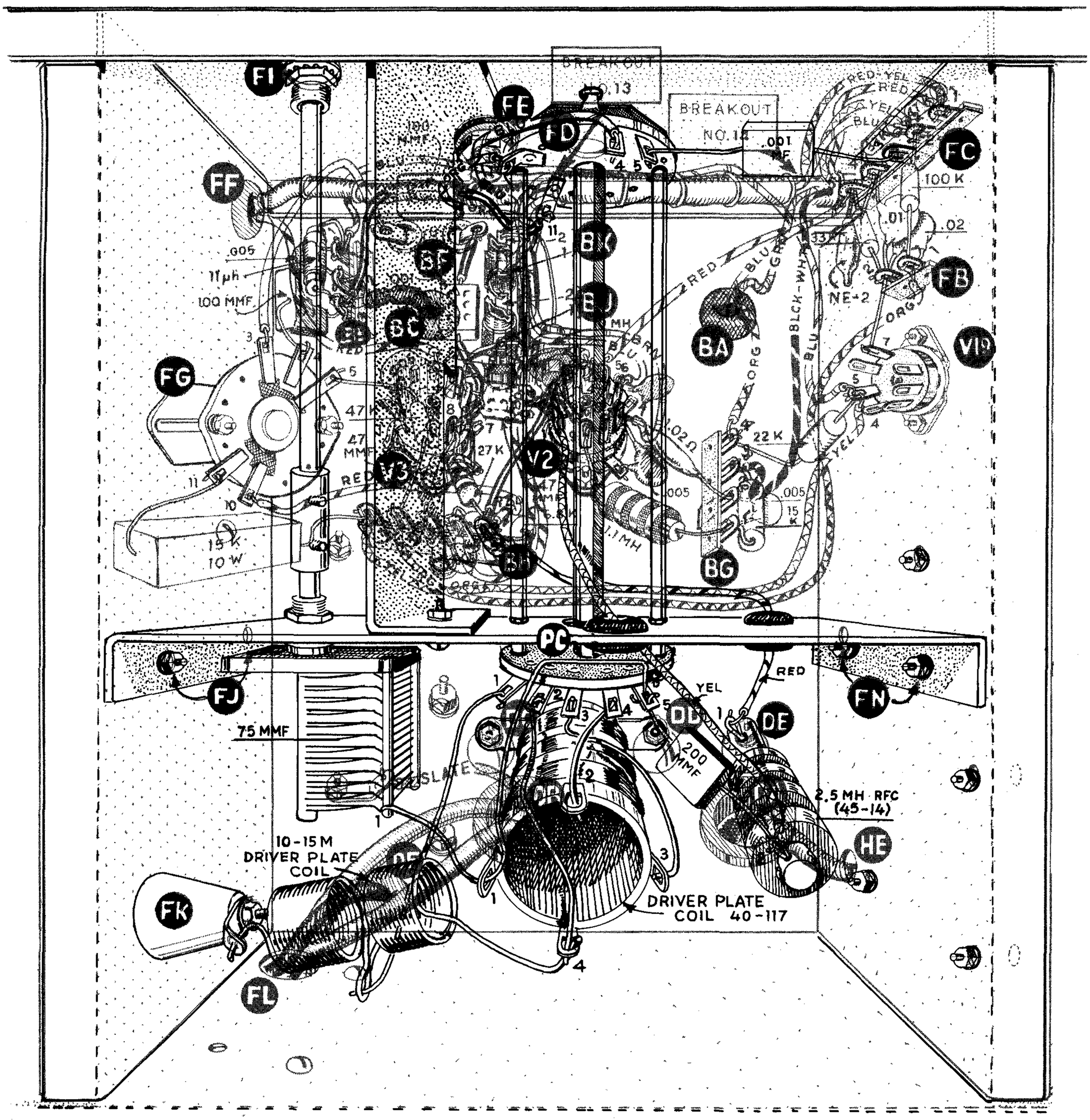

Pictorial 20

( ) Mount the driver shield as shown. This is the light gauge, irregularly shaped metal piece. Slide the notch in the longer flange between the chassis and the lockwasher of the bushing installed at location FE. Secure the other end of the shield to the shield partition with a #6-32 x 1/4" RHMS through hole PE. Make sure the shield does not touch any components so as to cause a short circuit. Do not tighten the nut on bushing FE as yet.

( ) Install the extension shaft for the 75 mmf variable capacitor. This is the plain shaft 4 3/4" long. Slide a 1/4" to 1/4" shaft coupling onto one end of the shaft for a distance of half the coupling length and secure with a #6-32 set screw. Slide a 3/8" nut, then a 3/8" lockwasher over the other end of the shaft and insert that end through hole FI from the inside of the chassis. Now slide a 3/8" long shaft bushing with a 1/4" ID over the end of the shaft, thread first, and secure in the hole FI with the nut and lockwasher. Slide the coupling over the capacitor shaft and secure with a second #6-32 set screw.

( ) Mount the driver plate coil, 40-117, on the screws at DC and DD, using #6 nuts and lockwashers. The lug connected to the bottom, or start, of the large winding, should be nearest the variable capacitor and over DC. Inspection of the inside of the coil form will reveal this lug.

( ) Locate the 10-15 M driver plate coil, 40-61. Referring to the pictorial, separate the two coil halves and then slightly spread the coil half with the most turns.

( ) Mount the 10-15 M driver plate coil between the solder lug on the feed-through insulator FK (S1) and lug 4 of the coil form (NS). The lead from the coil half with the most turns should be connected to FK. Cut the small coil leads to length, scraping away the enamel insulation, if necessary.

( ) Using #20 bare wire and following the pictorial carefully, proceed as follows: Connect switch lug PC-1 (S1) to the tap on the 10-15 M coil (S1); connect PC-2 (S1) to coil form lug 4 (S2); connect PC-3 (S1) to coil form lug 3 (S1); connect PC-4 (S1) to coil form lug 2 (S1).

( ) Connect one end of a #20 bare wire to PC-5 (NS). Pass the other end through coil form lug 1 (NS) to lug 1 of the variable capacitor (S1). Now solder coil form lug 1 (S1).

( ) Mount the 2.5 mh RFC on the screw at DE. Screw down until snug. Connect the free red wire from BH-5 through grommet PB to lug 1 of the RFC (S1).

( ) Connect the free yellow wire from V2-1 through grommet PA to lug 2 of the RFC (NS).

( ) Connect a 200 mmf (red-black-brown) mica capacitor between PC-5 (S2) and lug 2 of the RFC (S2).

This completes final wiring in the exciter compartment. Carefully recheck your work for wiring errors or short circuits. Final wiring will now be completed in the modulator compartment.

FINAL WIRING IN THE MODULATOR COMPARTMENT

Refer to Pictorial 21 for following steps:

( ) Mount a 3 lug (center ground) terminal strip on the modulator compartment side of hole FA. Position as shown. Use a #6-32 x 1/4" RHMS with a lockwasher under the nut.

( ) Connect the two free red wires and the blue wire to FA-1 (S3).

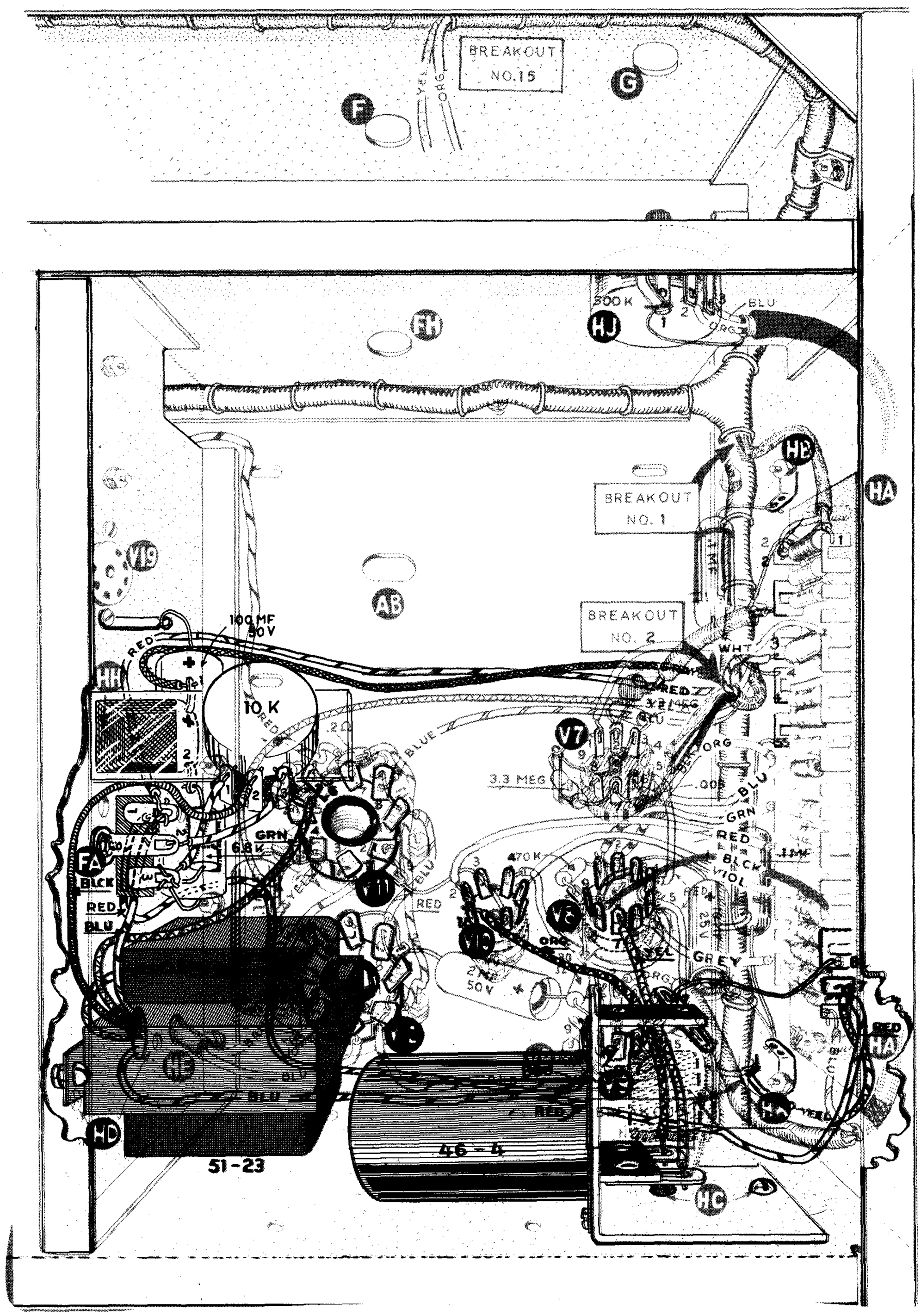

Pictorial 21

( ) Locate the 10 K ohm tab mount control and mount it on the bias control mounting bracket as shown. Mount on the side away from the bend and secure by twisting the mounting tabs.

( ) Locate the selenium rectifier and mount it and the bias control bracket at location HH as shown, placing the rectifier mounting stud through the hole in the bracket flange, then through the hole in the chassis. Secure with a #6 nut and lockwasher.

( ) Connect the free gray harness wire to lug 1 (+) of the selenium rectifier (S1). Dress this wire as far from V7 as possible where it breaks out of the harness.

( ) Connect a 6.8 Kohm (blue-gray-red) 1 watt resistor between lug 2 of the selenium rectifier (S1) and FA-3 (NS).

( ) Using hookup wire, connect lug 1 of the 10 K ohm bias control (S1) to FA-3 (NS).

( ) Connect the black lead from the drive transformer to lug 2 of the 10 K ohm bias control (S1).

( ) Using hookup wire, connect lug 3 of the 10 K ohm bias control (S1) to FA-2 (S1).

( ) Connect the negative lead of a 100 mf, 50 V electrolytic capacitor to FA-3 (S3) and the positive lead to the small solder lug under the socket V19 mounting screw (S1), positioning the capacitor as shown under the rectifier.

This completes final wiring in the modulator compartment.

FINAL WIRING IN THE FINAL AMPLIFIER GRID CIRCUIT COMPARTMENT

NOTE: Refer to Pictorial 22. To facilitate wiring, remove the coaxial cable inner conductors previously connected temporarily to mode switch lugs GD-26 and GD-29.

( ) Using a 12" length of orange hookup wire, connect control lug CQ-2(S1) to V4-7 (S1). Route wire as shown.

( ) Using an 8" length of yellow hookup wire, connect CQ-1 (S1) to terminal strip CI-2 (NS).

( ) Connect a 470 K ohm (yellow-violet-yellow) 1/2 watt resistor between CQ-3 (S1) and GA-1 (S1).

( ) Using a 6" length of orange hookup wire, connect one end to GD-14 (S1). Pass the other end through V4-5 (NS) to V4-6 (S1). Now solder V4-5 (S1).

( ) Using orange hookup wire, connect GD-17 (S2) to CB-1 (NS).

( ) Using orange hookup wire, connect control CR-2 (S1) to CJ-3 (NS). Route wire as shown.

( ) Using orange hookup wire, connect CR-3 (S1) to CB-3 (NS).

( ) Using #18 hookup wire, connect GC-2 (NS) to GD-3 (S1). Route wire along side of compartment behind the tube and control bracket as shown.

( ) Connect a 4.7 K ohm (yellow-violet-red) 1 watt resistor between CB-4 (S2) and CB-3 (NS).

( ) Connect an 8.2 K ohm (gray-red-red) 1 watt resistor between CB-3 (S3) and CB-2 (NS).

( ) Connect a 4.7 K ohm (yellow-violet-red) 1 watt resistor between CB-2 (S3) and CB-1 (NS).

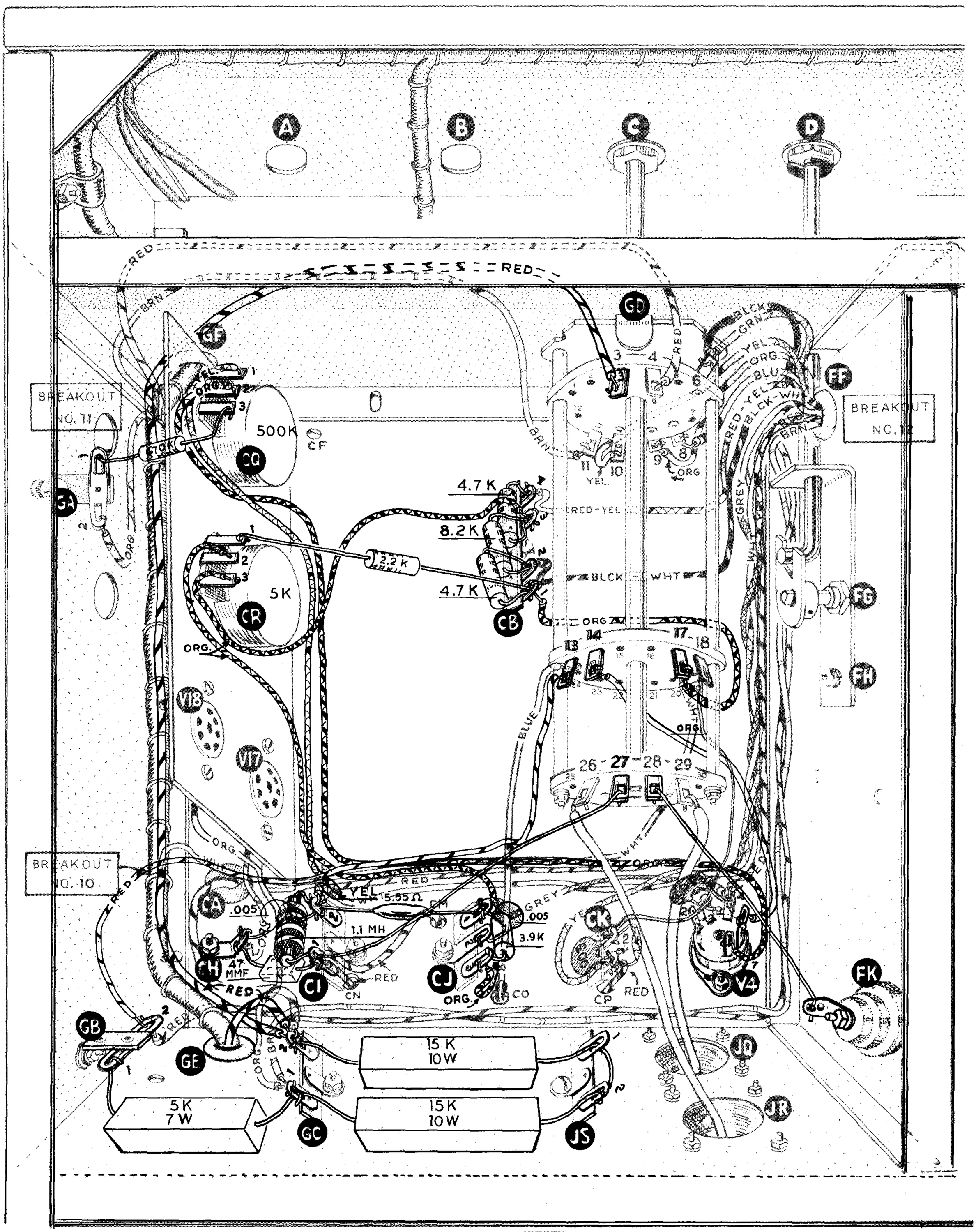

Pictorial 22

( ) Connect a 2.2 K ohm (red-red-red) 1 watt resistor between CR-1 (S1) and CB-1 (S3).

( ) Connect a .005 mf disc capacitor between CJ-1 (NS) and CJ-2 (S1).

( ) Connect a 5.55 ohm, 1/2 watt precision resistor between CJ-1 (NS) and CI-2 (NS).

( ) Connect a 3.9 K ohm (orange-white-red) 1 watt resistor between CJ-1 (S4) and CJ-3 (S2).

( ) Connect a .005 mf disc capacitor between CI-2 (NS) and the solder lug CH (NS).

( ) Connect a 47 mmf mica (yellow-violet-black) capacitor between CI-1 (NS) and solder lug CH (S3).

( ) Connect a 1.1 mh RFC between CI-2 (S5) and CI-1 (NS).

( ) Connect one lead of a 15 K ohm, 10 watt resistor to GC-2 (S4). Pass the other end through JS-1 (NS) to JS-2 (NS). Now solder JS-1 (S1). Position against chassis.

( ) Connect a second 15 K ohm, 10 watt resistor between GC-1 (NS) and JS-2 (S2). Position against chassis.

( ) Connect a 5 K ohm, 7 watt resistor between GC-1 (S4) and GB-1 (S1). Position against chassis.

( ) Using red hookup wire, connect GB-2 (S2) to GD-13 (S2).

( ) Using #16 bare wire, connect the solder lug on standoff insulator FK (S1) to mode switch lug GD-28 (S1). Run lead direct, as shown.

( ) Connect the coax center conductor from hole JQ to GD-29 (S1).

( ) Connect the coax center conductor from JR to GD-26 (S1).

( ) Using #16 bare wire, connect GD-27 (S1) to CI-1 (S5). Run lead direct, as shown.

This completes final wiring in the final amplifier grid circuit compartment. All under chassis wiring is now complete. Pick out all pieces of loose wire, turn the transmitter over and set it aside temporarily.

ASSEMBLY AND INSTALLATION OF THE DIAL MECHANISM

( ) Refer carefully to Figures 25, 26 and 27. Locate the parts illustrated and note their designation. Parts will be given two letter designations (XA, XB, etc.,), and holes will be numbered. The gear train will be assembled first, then the dial drum. The Figures presented here will be worth more than all the words that could be used to describe this assembly process. A complete understanding of the pictorials before starting will result in a rather simple assembly job.

NOTE: This dial mechanism is used in both the Heathkit TX-1 "Apache" and the RX-1 "Mohawk". Therefore, in the interest of standardization, some holes will not be utilized in several of the parts. These will be pointed out during assembly.

( ) Place the backplate XA on the top of an open cardboard box with the flanged side of the bronze bearings up and the narrow side toward you, as in Figure 25. Placing the unit on a box allows it to be flat but permits the shafts to be inserted through the bearings and supports them in position. From time to time it will be necessary to pick up the backplate for assembly purposes, but returning it to the "reference" position will make the assembly instructions clearer.

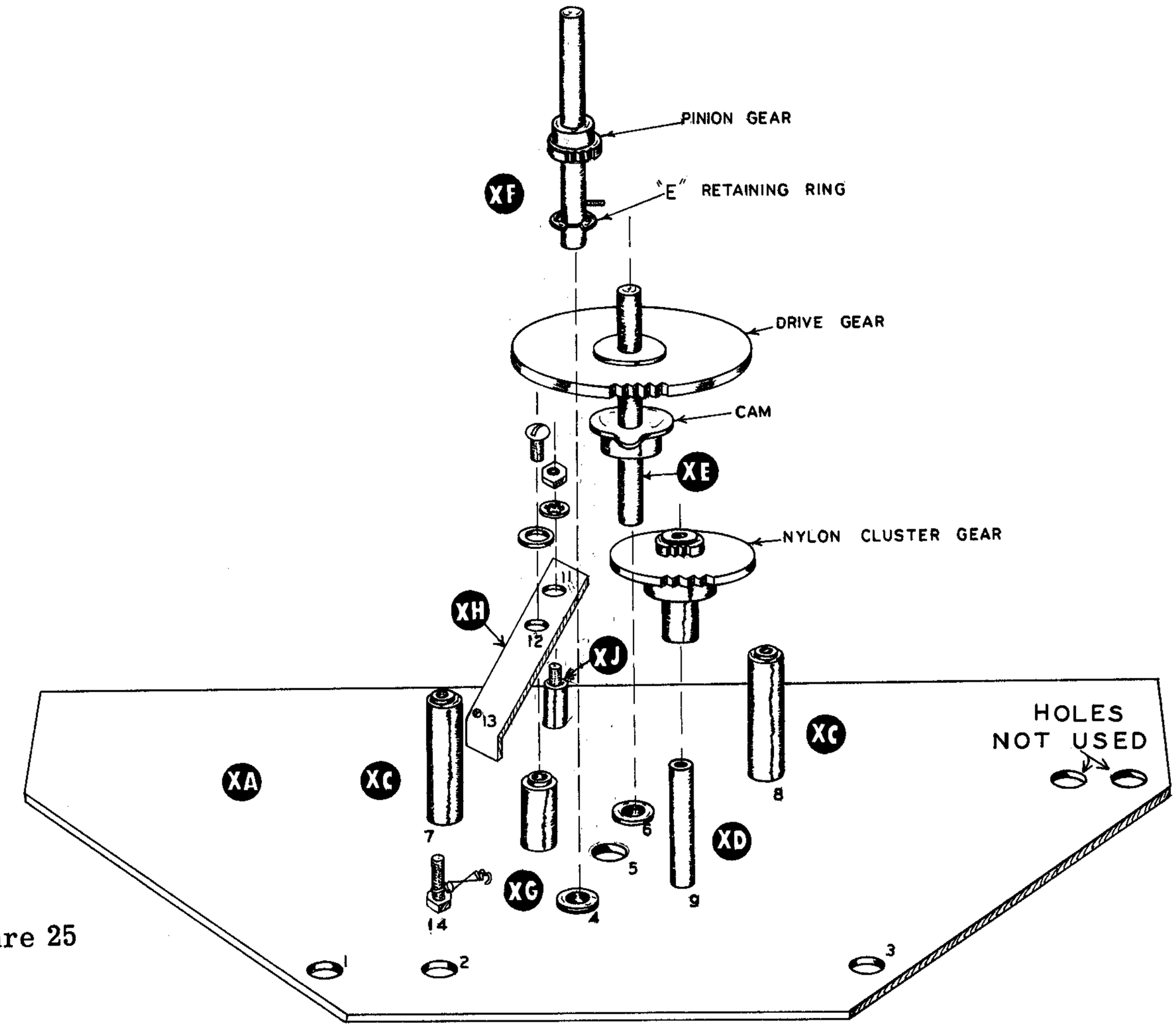

Figure 25

( ) Mount the two shouldered spacers XC, one at location 7 and one at location 8. Use #6-32 x 3/8" RHMS and #6 flat washers, inserting the screws from the back of the plate.

( ) Mount the cluster gear shaft XD at the slotted hole 9. Secure temporarily with a #6-32 x 3/8" RHMS and #6 flat washer from the back side of the plate.

( ) Slip the nylon cluster gear over the shaft XD with the smaller gear up as shown.

( ) Locate the drive gear shaft XE with the drive gear assembled to it. Also locate the dial stop cam and start a #8-32 x 1/4" Allen head set screw into the hub.

( ) Slip the cam over the long end of shaft XE with the bushing side of the cam toward the end of the shaft, as shown. Do not tighten the set screw at this time.

( ) Slip the cam end of the shaft XE into the bearing at 6 on the back plate until the drive gear engages the small gear on the nylon cluster gear. The mesh may not be perfect at this time but this will be adjusted later.

( ) Locate the pinion gear shaft XF with the pinion gear assembled to it. Press the 7/16" roll pin through the hole in shaft XF until one end is flush with the surface of the shaft. This leaves 3/16" of the pin extending from the shaft.

( ) Snap an "E" retaining ring in the groove of shaft XF.

( ) Slip the retaining ring end of the shaft into bearing 4 on the back plate until the retaining ring is flush against the bearing flange. The pinion gear will now mesh with the large gear of the nylon cluster gear. It is normal that the pinion gear is not centered on the large nylon gear, but rather rides near the top edge of the nylon gear.

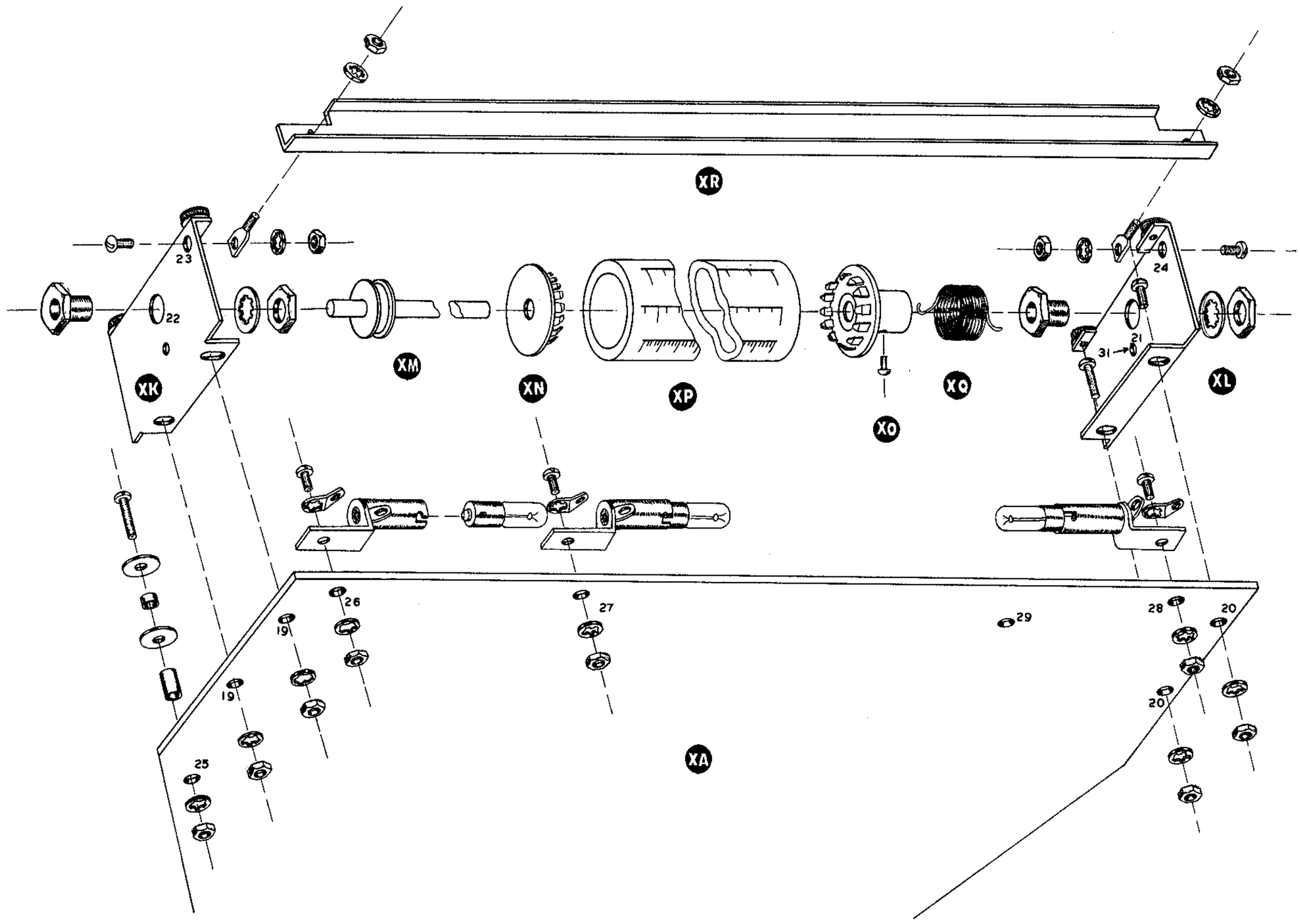

Figure 26

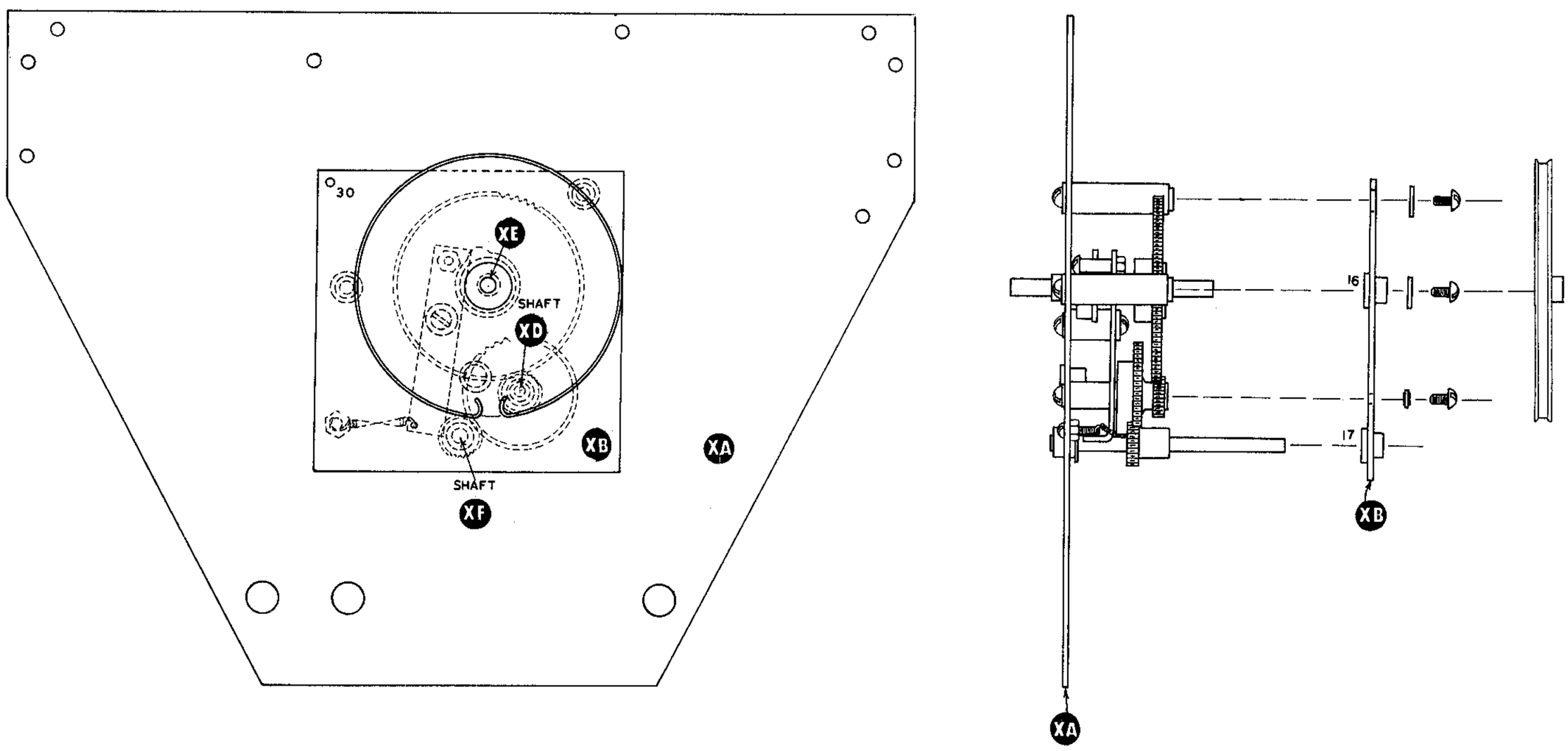

Figure 27

NOTE: Hole 5 in the back plate XA is not used.

( ) Locate the dial stop arm XH. In hole 11, mount the cam rider stud XJ. Insert the cam rider in hole 11 so the stud extends from the arm in the direction of the flange at the other end of the arm. Secure with a #6 nut and lockwasher.

( ) Insert the shouldered end of the stop arm spacer XG in hole 12 of the arm XH so it extends in the same direction as the rider stud. Place a #6 flat washer over a #6-32 x 1/4" RHMS and secure in the tapped hole in the shouldered end of XG. Notice that the arm XH now pivots freely around the spacer XG.

( ) Now slide the spacer-arm assembly into position over hole 10 on the back plate XA and secure with a #6-32 x 3/8" RHMS and lockwasher from the back side of the back plate into the other tapped hole in XG.

( ) Now place the front plate XB in position, referring to Figure 25 & 27. The shaft XE will enter bearing 16 and the shaft XF will enter bearing 17. Mating holes in XB for the spacers XC and cluster gear shaft XD will now be readily apparent. Make sure the shoulders of the spacers XC are properly seated. Now secure the front plate with #6-32 x 3/8" RHMS and #6 washers in each spacer SC and with a #6-32 x 1/4" RHMS and #6 lockwasher in XD. Do not worry about adjustment yet.

( ) Insert the #4-40 x 1/2" RHMS through hole 14 in the back plate XA from the back side. Secure with a #4 nut and a #4 lockwasher.

( ) Two small tension springs are provided. Select the one with the weakest tension and insert one end in hole 13 on the stop arm XH and slip the other over the top end of the #4-40 screw at hole 14.

( ) Loosen cluster gear shaft XD and adjust for rough gear mesh and then retighten temporarily.

( ) Adjust the cam on shaft XE along the shaft to the point where the shaft will be held in place between the two plates, the large drive gear acting as one limit, the cam itself as the other. Now, by rotating the cam in small steps, adjust the stop action so the pin hits the stop before the arm hits the shaft XF at each end of the cam rotation cycle.

( ) Once again loosen the screws at each end of the cluster gear shaft XD and position the shaft until the proper mesh is obtained. Proper mesh should provide no backlash in the gear train with a fairly free running action. If a "stiff" gear train is desired, mesh the cluster gear more tightly. A free action can be obtained by backing off the cluster gear but a small amount of backlash may be introduced. Once the setting you prefer is determined, tighten shaft XD securely. NOTE: Temporarily placing the large aluminum tuning knob on the shaft XF extending from the front plate, will give a better indication of the "feel" of the dial mechanism after assembly.

( ) Insert the #5-40 x 3/4" RHMS through the hole in the single plastic pulley provided. Place a #5 nut on the screw and screw close to the pulley to a point where the pulley just turns freely. Place a second #5 nut on the screw and secure against the first. Now place the screw through hole 30 (See Figure 27) in front plate XB from the front and secure with a third #5 nut and #6 lockwasher. Check once again for free rotation of the pulley.

( ) Place the large 3 1/2" dial cord pulley over shaft XE extending from the front plate XB. Place with the hub out, as shown, in Figure 27, and secure with the face of the hub flush with the end of the shaft. Use a #8-32 x 1/4" Allen head set screw. Orient the opening in the rim of the pulley opposite the shaft XF when the shaft XF is in its full clockwise position.

( ) Referring to Figure 26, mount one of the two identical dial drum support brackets at hole location 20 at the upper left corner of the back plate XA when observing it in its reference position. This left hand bracket is now designated XL. Mount firmly, but not securely as yet, with a #6-32 x 3/8" RHMS in the top hole and a #6-32 x 3/4" RHMS in the bottom hole, using lockwashers under the nuts. Insert the screws from the bracket side.

( ) Mount a 3/8" long shaft bushing with a 17/64" ID in hole 21 on bracket XL, positioning as shown with the threaded portion out. Secure with a 3/8" nut and lockwasher.

( ) Mount a spade lug on the inside of the bracket XL at hole location 24 with a #6-32 x 1/4" RHMS, as shown, using a lockwasher under the nut.

( ) Locate the plastic calibrated dial drum XP and the end plugs XN and XO. Place plug XN in the end of the dial drum at the high end of the calibration and place plug XO in the other end. Press in place firmly.

( ) Slip the long dial drum shaft XM through the drum, inserting the end opposite the fixed pulley into the hole in XN. Slide the shaft through the drum and out through the bushing on plug XO.

( ) Slip the spring XQ, looped end first, over the bushing on XO and place a #6-32 x 1/4" RHMS through the loop and into the tapped hole on the bushing. Do not secure the screw as yet.

( ) Now, take the other dial drum support bracket, and mount a spade lug in hole 23 as before. This bracket now becomes XK.

( ) Mount a second 3/8" long shaft bushing with a 17/64" ID in hole 22 of XK, this time with the threaded portion on the inside of the bracket, or opposite to the bushing in XL. Secure with a 3/8" nut and lockwasher.

( ) Insert the shaft end of the dial drum-shaft assembly with the spring mounted on the bushing into the bushing on bracket XL, previously installed. Now slip bracket XK over the pulley end of the shaft and secure the bracket to the backplate at hole 19. Use #6-32 x 3/8" RHMS with lockwashers, inserting the screws from the bracket side as before. Do not tighten securely yet.

( ) Place the dial pointer support piece XR in position on the two spade lugs as shown. The notches on the ends face out to clear the pulleys on the end brackets, and the flanges point up. Adjust the spacing of the brackets XK and XL until XR drops into place easily. Now center the whole drum assembly on the back plate and tighten securely with the screws at holes 19 and 20. Secure the dial pointer bracket XR with #6 nuts and lockwashers over the spade lugs.

( ) Insert the free bent end of the spring XQ through the small hole 31 in XL. Holding the spring firmly in place against the bracket with a pair of pliers, bend the short length of spring extending from hole 31 on the outside of bracket XL back in the direction it enters the hole at the inside, thus forming a square⊔ shaped hook to hold the spring in place.

( ) Holding the pulley on the shaft XM against the bushing in bracket XK, slide the dial drum toward XL until the bushing XO is flat against the bushing in XL. Adjust for a free turning action but do not allow any slop which could upset the dial calibration. Now tighten the #6 screw in the bushing XO.

( ) With the dial mechanism in the "reference" position, rotate the drum from rest (no spring tension) in a direction such that the top of the drum moves away from you (CW looking at end XK) for about 1/4 of a revolution, thus placing tension on the spring return. Now, hold-

ing end plug and bushing XO firmly in position, turn the plastic dial drum XP so it slides on the end plug until the 80 M dial calibration is up (directly in line with the internal drum shaft and away from the back plate). Now, release the drum and proceed with assembly.

( ) On a #6-32 x 1" RHMS, place, in the following order, a #6 metal washer, a 1/8" #6 spacer, a second #6 metal washer, and a 3/8" #6 spacer. Now insert the screw through hole 25 in the back plate from the front side and secure with a #6 nut and lockwasher.

( ) Mount the bayonet pilot light sockets at locations 26, 27, and 28 as shown on the top of backplate XA. Observe that the sockets all point toward the center, making the mounting position of 28 opposite to 26 and 27. Secure with #6-32 x 3/8" RHMS inserted from the back of the backplate, placing #6 solder lugs under the screw heads on the sockets. Bend lugs up at right angles to clear the drum. NOTE: Hole 29 is not used.

( ) Using #20 bare wire, connect the bottom socket lug to the near solder lug on each socket and solder all six connections.

( ) Using orange hookup wire, connect the remaining (top) lug of bayonet socket 26 (S1) to the top lug of bayonet socket 27 (NS).

( ) Again, using orange hookup wire, connect the top lug of bayonet socket 27 (S2) to the top lug of bayonet socket 28 (NS).

( ) Place the transmitter resting on the rear apron and the transformers so the front is up. Remove the shaft bushing at FE and the nut on the shaft at FD.

( ) On the drive shaft extending from the rear of the dial mechanism backplate, place the brass tuning drive gear, sliding the gear on the shaft teeth first. Start a #8-32 x 1/4" Allen head set screw in the hub. Position with the set screw toward the top of the backplate with the tuning knob shaft full CCW. Secure temporarily with the face of the hub flush with the end of the shaft.

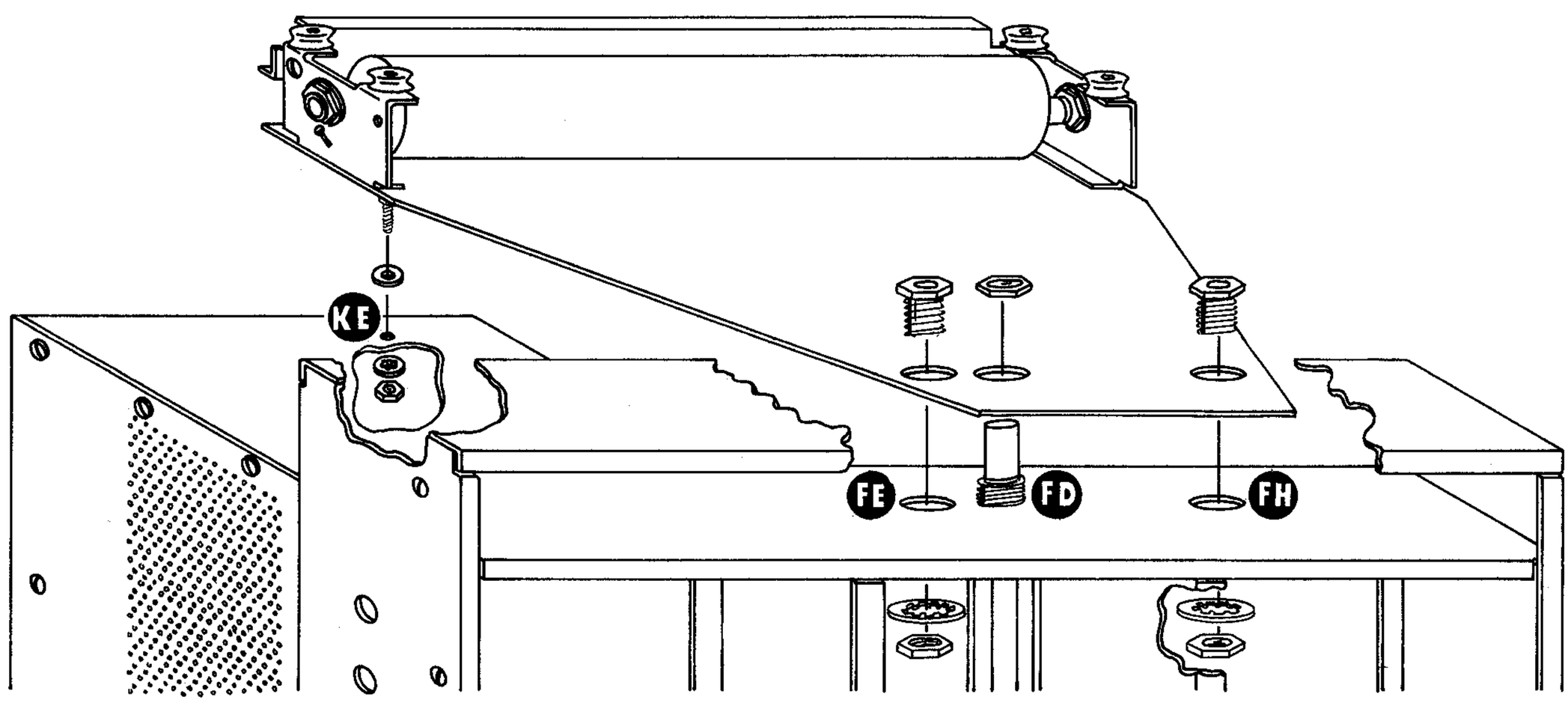

Figure 28

( ) Place the dial mechanism in place, as shown, in Figure 28 over the switch shaft at FD. The three bottom holes on the back plate will line up with FE, FD, and FH. Place a #6 fiber washer over the long bracket mounting screw at the top left side of the mechanism and then insert the screw into hole KE in the front panel of the final amplifier shield.

( ) Reinstall the bushing at FE and install a 3/8" long shaft bushing with a 17/64" ID at FH in the same manner, inserting from the front side of the partition. Tighten securely with a 3/8" nut and lockwasher.

( ) Reinstall the nut over the shaft bushing at FD and tighten.

( ) Install a #6 lockwasher and nut on the screw protruding from hole KE on the inside of the final amplifier shield and tighten.

( ) Place the anti-backlash VFO drive gear on the VFO capacitor shaft, after starting a #8-32 x 1/4" Allen head set screw in the hub. Install hub first, slide the gear on as far as it will go, and tighten the set screw securely.

( ) Run #6 sheet metal screws into all the VFO cover plate holes, then remove the screws and plate entirely. This will make reassembly later much easier since the threads will have been already cut.

( ) Set the VFO capacitor to approximately full mesh and remove the nut from the VFO switch shaft bushing on the bottom of the sub-chassis.

( ) Set the three 15 mmf VFO trimmer capacitors to full open (plates unmeshed). Now scratch or paint a mark on each trimmer shaft and a corresponding mark on the chassis next to each shaft so the full open position can be determined for each capacitor after the VFO cover plate is secured.

( ) Cut the three wires coming up from the grommet BA to a length of 3 1/4" above the chassis and strip the ends for 1/2".

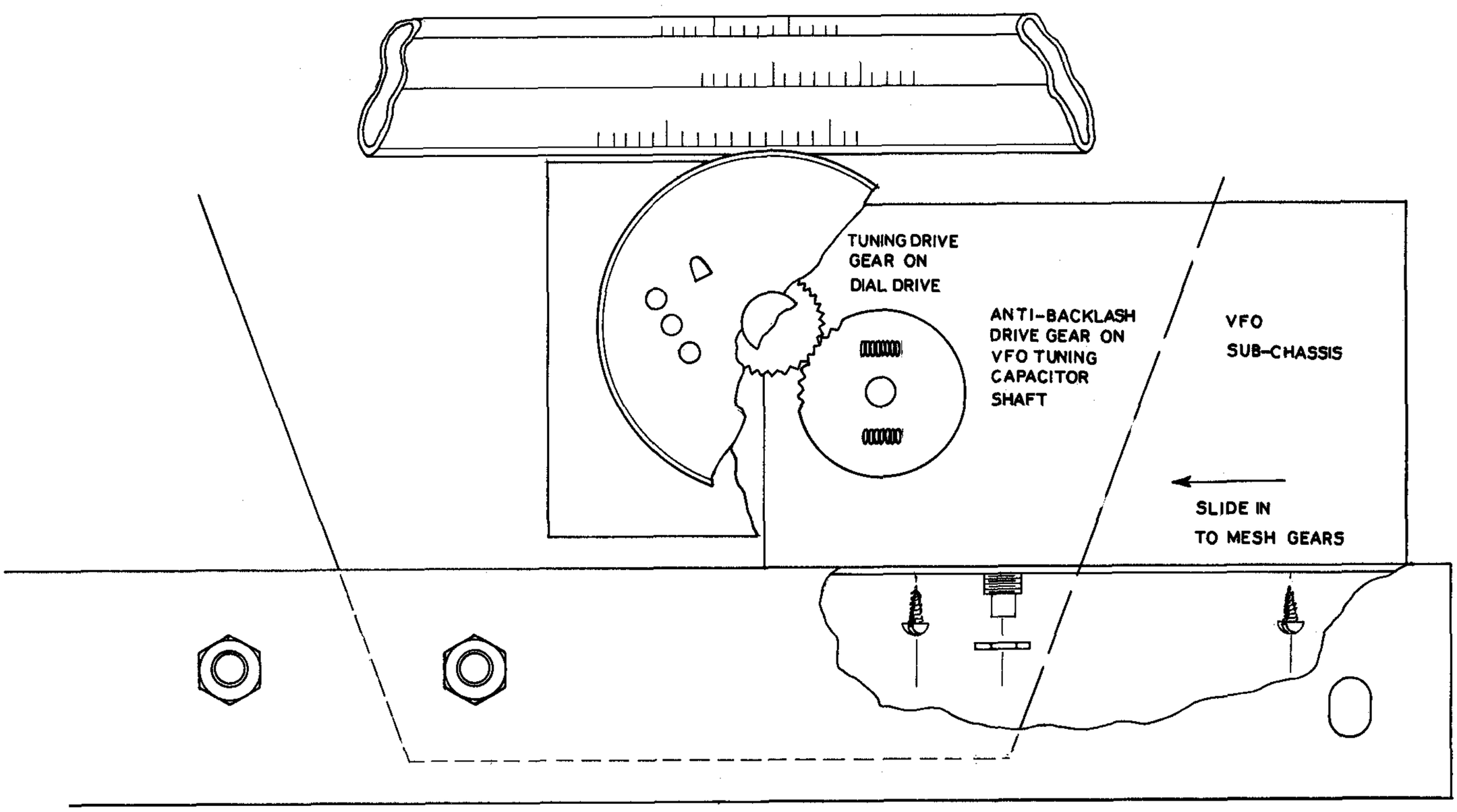

Figure 29

( ) Referring to Figure 29 set the VFO sub-chassis in position on the chassis top plate, with the switch bushing through the chassis top plate slotted hole AB. Replace the nut on the switch bushing but do not tighten. Notice that the four small holes in the bottom of the VFO sub-chassis now line up with the four small slotted holes in the top plate. Insert #6 sheet metal screws from the under side of the chassis through the slotted holes into the four small holes in the VFO sub-chassis. Do not tighten completely as yet.

( ) Place tension on the anti-backlash gear by rotating one half of the gear past the other for a distance of one tooth. Hold the tension with a screwdriver or fingers and slide the VFO sub-chassis inward until the two gears mesh. Now adjust the final position of the VFO until full mesh, without binding, is obtained, then tighten the nut on the switch bushing and screw the four sheet metal screws down securely. Check the gear mesh once again after securing and readjust if necessary.

( ) Referring to Figure 30, connect the orange wire from grommet BA to VFO feed-through capacitor C (S1), the green wire to feed-through capacitor B (S1) and the blue wire to feed-through capacitor A. (S1)

( ) Plug the phono plug on the end of the coaxial cable into the phono jack on the top of the VFO.

( ) String the pointer drive dial cord, as follows, referring to Figure 36A: Rotate the tuning shaft full CW. Using the full length of dial cord supplied, make a small secure loop (See Figure 36B) in one end and place over hook 1 on the drive pulley. Now, pass the cord through the opening on the rim of the pulley; make one complete CW turn on the pulley, and pass up and over the small plastic pulley on the front plate. Then route the cord to the left

Figure 30

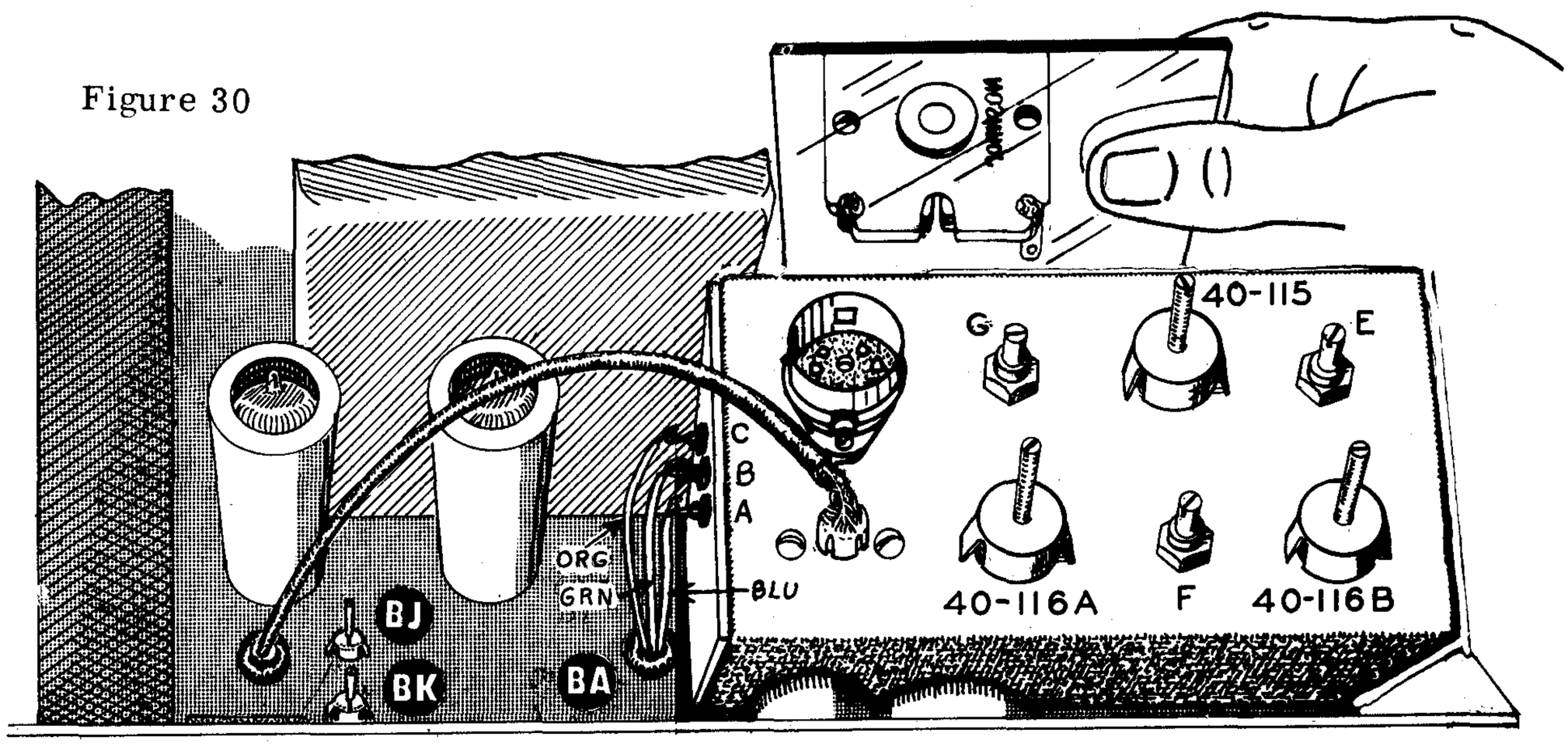

and up over the two plastic pulleys on the left bracket, across the pointer bracket laying the cord behind the front flange. Finally, run the cord down over the two plastic pulleys on the right bracket, then to the left and, starting from the opening in the pulley rim, make one more complete CW turn, then pass the cord up through the rim opening. Place one end of the remaining small tension spring over hook 2 of the pulley and pass the free end of the dial cord through the other end of the spring. Pull the string taut enough to stretch the spring about 3/8" and secure the string to the spring with several overhand knots.

( ) With the dial mechanism still full CW, place the pointer in place on the front flange of the pointer bracket. Slip the dial cord between the center prong and the two end prongs on the back of the pointer, then slide the pointer upscale until it is about 1/8" beyond the "4000" calibration mark on the 80 M band scale and secure lightly by pinching the center and end prongs together. Now rotate the dial mechanism full CCW and note position of the pointer

below the "3500" calibration. If not equal to the upper off-scale position, readjust the pointer location until the upper and lower off-scale positions are equal. If pointer does not ride on the guide smoothly, sand the guide with emery cloth or fine sandpaper and oil lightly.

( ) Now rotate the tuning shaft until the pointer is set exactly at 3500 KC on the 80 M scale. Loosen the set screw on the brass drive gear on the rear of the back plate. Using a small mirror, such as a compact or hand mirror, or a piece of a larger broken mirror, position as shown in Figure 30 so that, when looking down on the transmitter, it is possible to sight through the small U shaped opening on the bottom edge of the rear ceramic stator support of the VFO tuning capacitor.

( ) With the dial pointer set on 3500 KC, rotate the now free brass tuning drive gear while observing the rotor and stator plates through the U shaped opening in the back of the VFO capacitor as described above. As the VFO capacitor plates approach and pass through full mesh, a V shaped space will be formed by the rotor and stator plates, as viewed in the mirror. Set the V to its maximum size and then tighten the set screw in the brass tuning drive gear securely.

( ) Replace the VFO sub-chassis cover plate and secure with ten #6 sheet metal screws.

( ) Install the right dial mechanism support bracket as shown in Figure 31 Remove the nut and lockwasher from the bottom right dial drum support bracket mounting screw, place the bracket over the screw, and then replace the lockwasher and nut. Do not tighten as yet. Secure the other end to the VFO sub-chassis by means of the top rear sheet metal screw on the end of the VFO sub-chassis. Now tighten the nut on the bracket mounting screw.

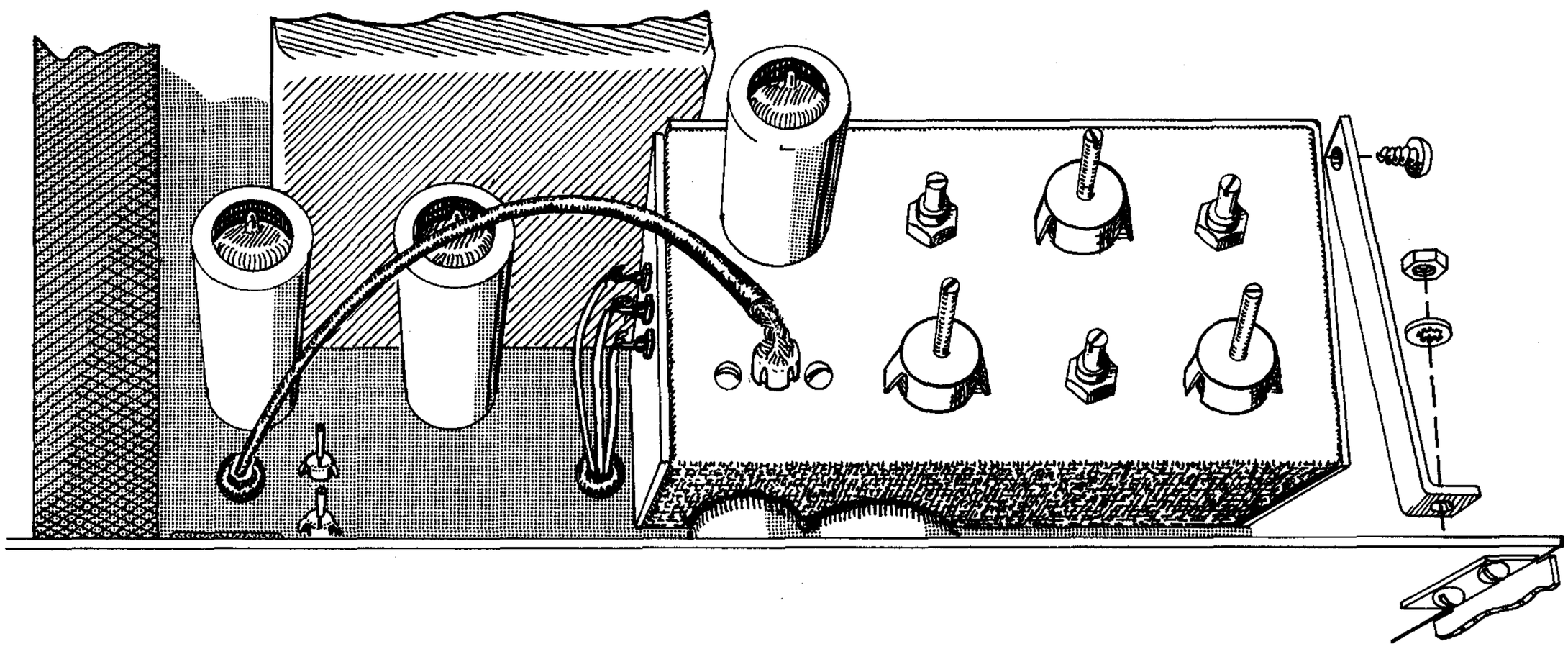

Figure 31

PANEL, LINKAGE, AND DRIVE ASSEMBLY AND INSTALLATION

( ) Locate the long phosphor bronze band and two band drive pulleys. Secure the center of the band to rim of one of the pulleys with a #6-32 x 1/4" RHMS through the hole in the band into the tapped hole in the pulley. Do not use a lockwasher. Start a #8-32 x 1/4" Allen head set screw in the pulley hub.

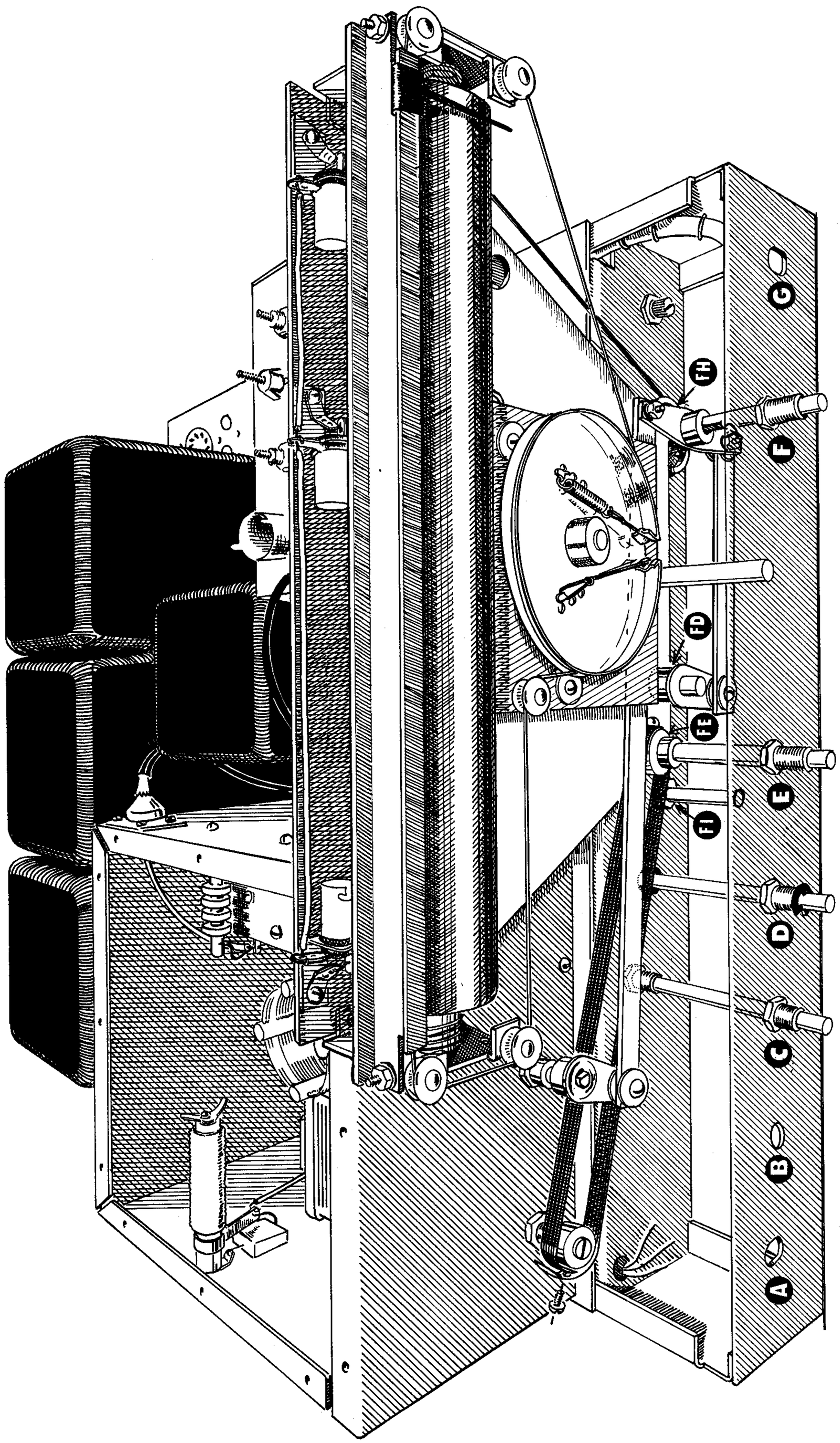

Pictorial 23

( ) Locate the final tune drive shaft. This is the plain shaft with a single groove near the flatted end. Referring to Pictorial 23 and Figure 32, mount a 9/16" long shaft bushing with a 1/4" ID in slotted hole E on the front apron, inserting through the hole from the rear of the apron. Secure temporarily with a 3/8" nut. Do not use a lockwasher. Insert the plain end of the shaft through bushing E from the front of the chassis, then through the band drive pulley with the band secured to it, entering from the hub side. Now slide the shaft into the bushing FE on the inner front apron. Insert an E retaining ring in the shaft groove. Slide the pulley toward FE until the shaft is positioned snugly between both shaft bushings by the retaining ring and pulley. Now tighten the pulley set screw temporarily.

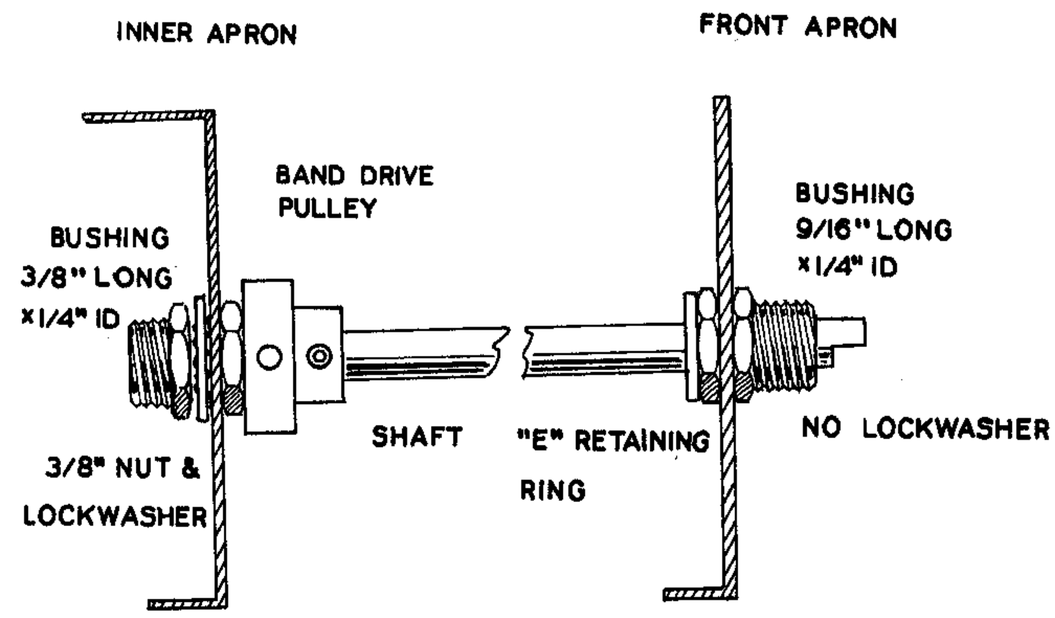

Figure 32

( ) With the hub towards the final amplifier shield, secure the two free ends of the long band to the rim of a second band drive pulley, using a #6-32 x 1/4" RHMS through the hole in each end of the band and into the tapped hole in the pulley rim. Do not tighten yet, and do not use a lockwasher. Start an #8-32 x 1/4" Allen head set screw in the pulley hub.

( ) Stretching the band tight, slip the band drive pulley over the final amplifier tuning capacitor shaft until the two pulleys are in line with one another. Now, tighten the screw holding the bands in place.

( ) Using a screwdriver in the slot on the end of the final tuning capacitor shaft, set the capacitor full open (rotor and stator unmeshed). Now loosen the pulley set screw on the drive shaft installed at E. Rotate the band drive full CCW and then set the flat on the drive shaft so it faces to the right. Now, with the capacitor full open, the band drive full CCW, and the drive shaft flat facing right, tighten both pulley set screws securely.

( ) Locate the two single link arms, the dual link arm, and the long and short links. Start #8-32 x 1/4" Allen head set screws in the three hubs. Refer to Figure 33 for the link drive assembly. When securing the link to the arms, use a #6-32 x 3/8" RHMS. Place a #6 flat washer next to the screw head, then slip a #6 x 1/8" spacer on the screw. Insert the group through the hole in the link, through another #6 flat washer, then pass the screw through the hole in the end of the link arm and secure with a #6 lockwasher and nut. The link is always secured on the side of the link arm away from the hub, as shown.

( ) Rotate the final band switch full CCW. Referring to Pictorial 23, place the single link arm on the end of the long link on the final band switch shaft hub first. Position with the link arm flush with the end of the switch shaft and tighten the set screw securely on the flat of the shaft. Now rotate the final band switch full CW.

( ) Locate the band switch shaft. This is the shaft with two flats on it. Refer to Figure 34. Mount a 9/16" long shaft bushing with a 1/4" ID at hole F as was done at hole E. Insert from the rear of the front apron and secure temporarily with a 3/8" nut. Slide the end of the band switch shaft with the long flat through the bushing F from the front, then through the the hub of the dual link arm. (At this time, slip the single link arm on the end of the short link over the exciter band switch shaft FD.) See Pictorial 23. Slip the 1 1/4" string pulley on the end of the band switch shaft, hub first, then slide the shaft on through bushing FH on the inner front apron. Position the shaft until both grooves are visible between the shaft bushings, then insert an E retaining ring in each groove.

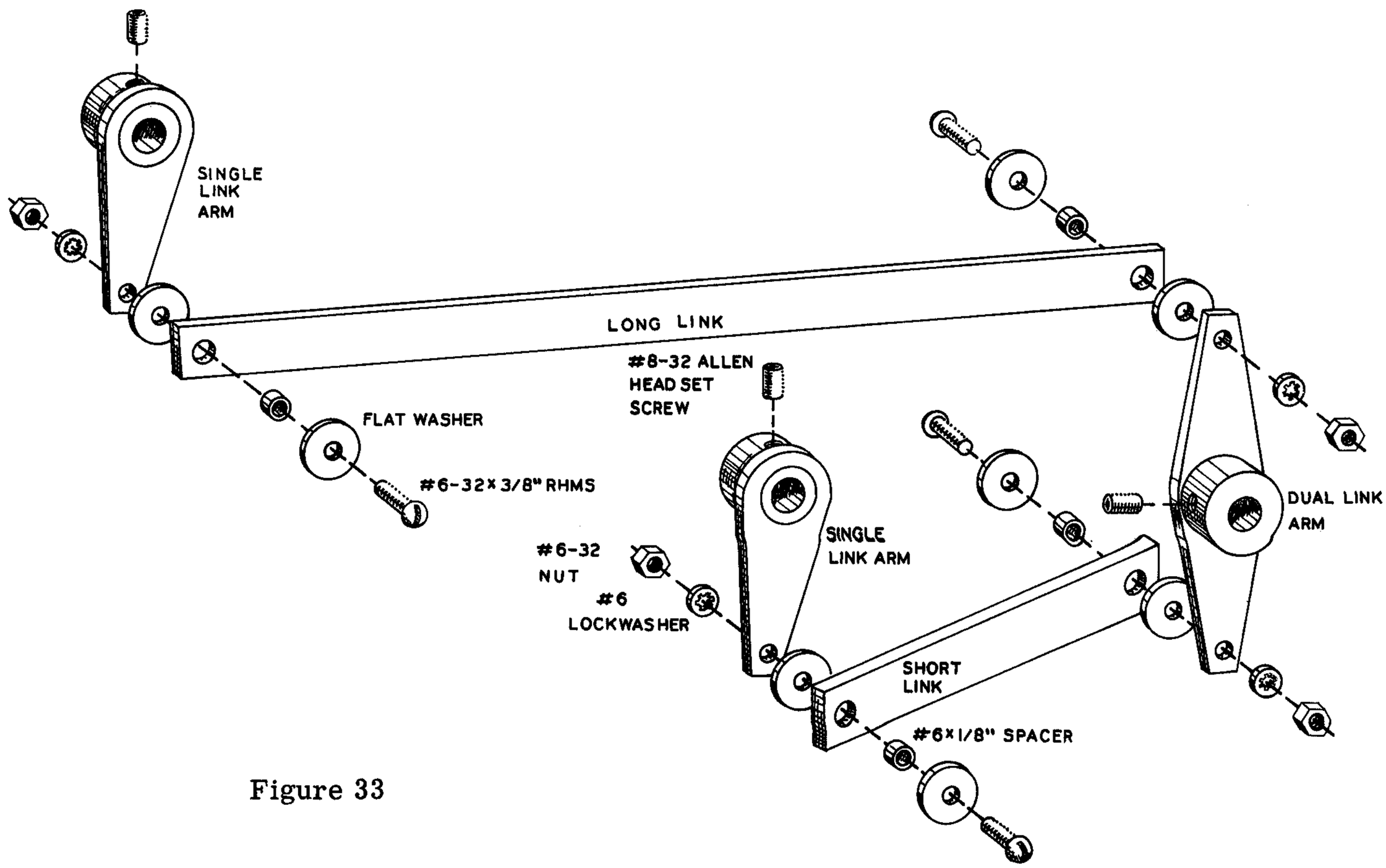

Figure 33

( ) Position the dual link arm on the flat on the shaft so the long link is parallel to the front of the chassis and then tighten the dual link arm set screw on the flat.

( ) Rotate the exciter band switch shaft FD and the final band switch to their mid-positions (two positions from either full CW or CCW). Tighten the remaining single link arm set screw on the exciter band switch shaft after positioning the arm so the short link is parallel to the front of the chassis. Use the long arm of the Allen wrench to gain access to the set screw.

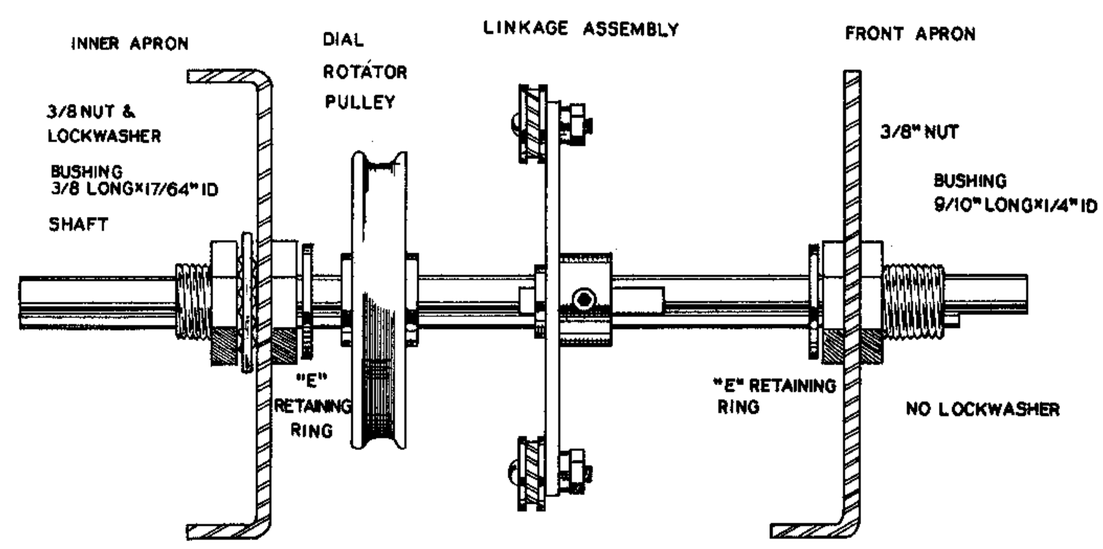

Figure 34

( ) Temporarily install one of the two 1 3/4" knobs on the band switch shaft using #8-32 x 1/4" Allen head set screws. Set the set screw opposite the pointer on the shaft flat. Rotate the band switch linkage through its entire travel several times to check for proper positive operation, full indexing of each switch, and clearance. A minor adjustment of the link arm on the exciter band switch shaft will correct any trouble with faulty indexing. Leave the band switch in its middle position as indicated by the knob pointer being straight up. Now turn the chassis up on end, resting on the left side.

( ) Looking at the VFO switch shaft from the bottom of the chassis, rotate it to the full CCW position. Locate the VFO switch drive plate. This is the plate with four cogs on it. Start a #8-32 x 1/4" Allen head set screw in the hub and then slip the plate on the VFO switch shaft plate first (hub out) and secure with the hub face flush with the end of the shaft by tightening the set screw on the shaft flat. Refer to Figure 35.

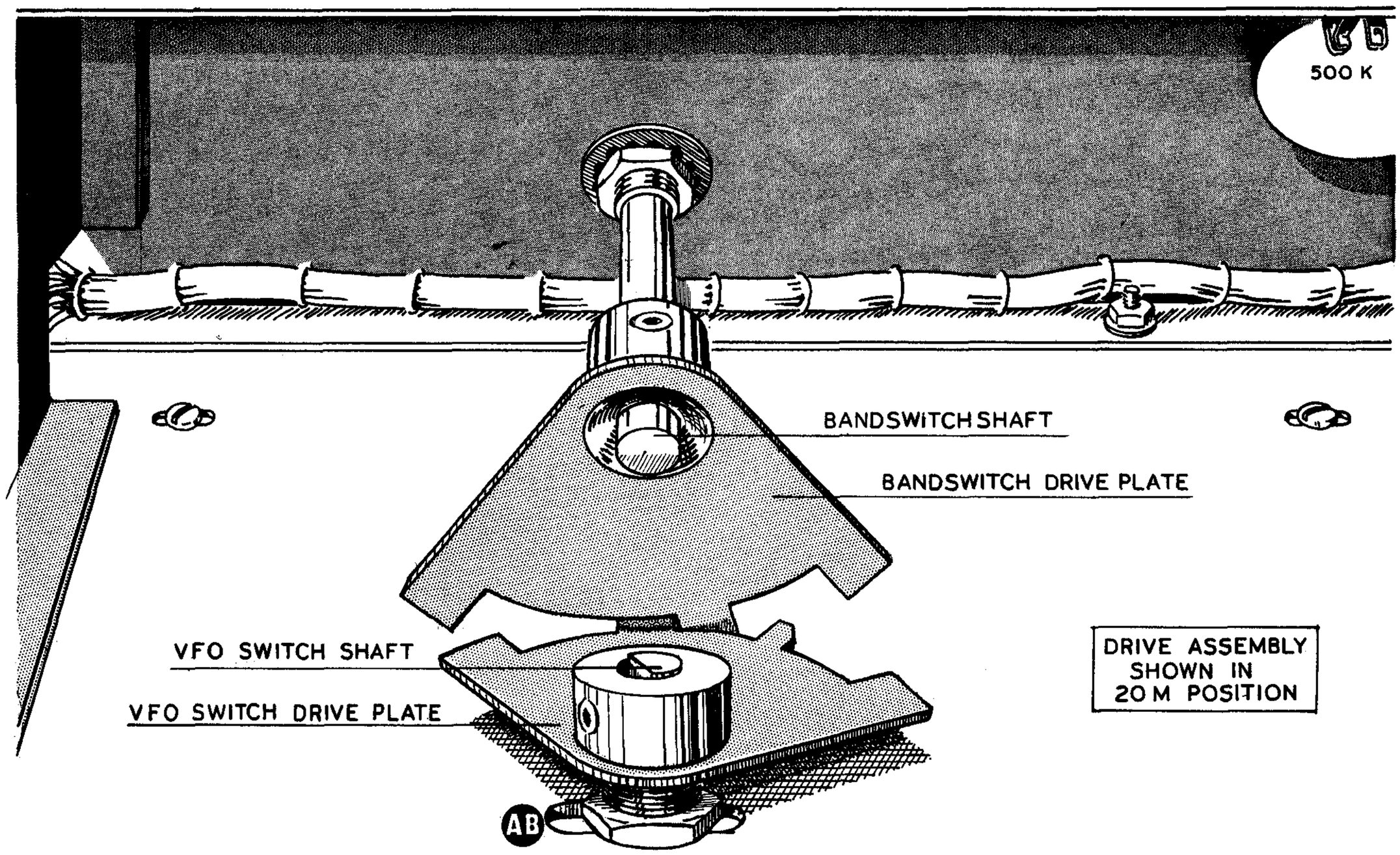

Figure 35

( ) Rotate the VFO switch shaft two steps in the CW direction. Locate the band switch drive plate, which is the plate with three cogs on it and start a #8-32 x 1/4" Allen head set screw into the hub. Position the band switch drive plate so the cogs of the two plates mesh as shown in Figure 35. Before securing the set screw on the shaft flat, further position the band switch drive plate so its cogs are about 1/32" from the cog base edge of the VFO drive plate. Now secure the band switch drive plate set screw.

( ) Rotate the band switch through its entire travel several times, using a firm indexing action with the wrist. Notice that as the band switch is rotated CW from full CCW, that the VFO band switch is actuated twice, skipped once, then actuated once more. If any binding between the drive plates is causing sluggish action, readjust the spacing between the plates by relocating the band switch drive plate on the band switch shaft. Leave the band switch in the 20 M or middle position (the knob pointer straight up).

( ) Place the transmitter down on the bench in its proper position, with the space between the front and inner front aprons overhanging the edge of the bench.

( ) Secure a small loop in one end of the remaining length of dial cord. Referring to Figure 36 slip the loop over the prong in the gap on the rim of the small pulley at the right end of the dial drum. Looking at the end of the drum from this end, make at least two full turns with the cord in a CW direction around the pulley, then allow the other end to hang free temporarily. The cord should be coming down off the rear of the pulley, as shown.

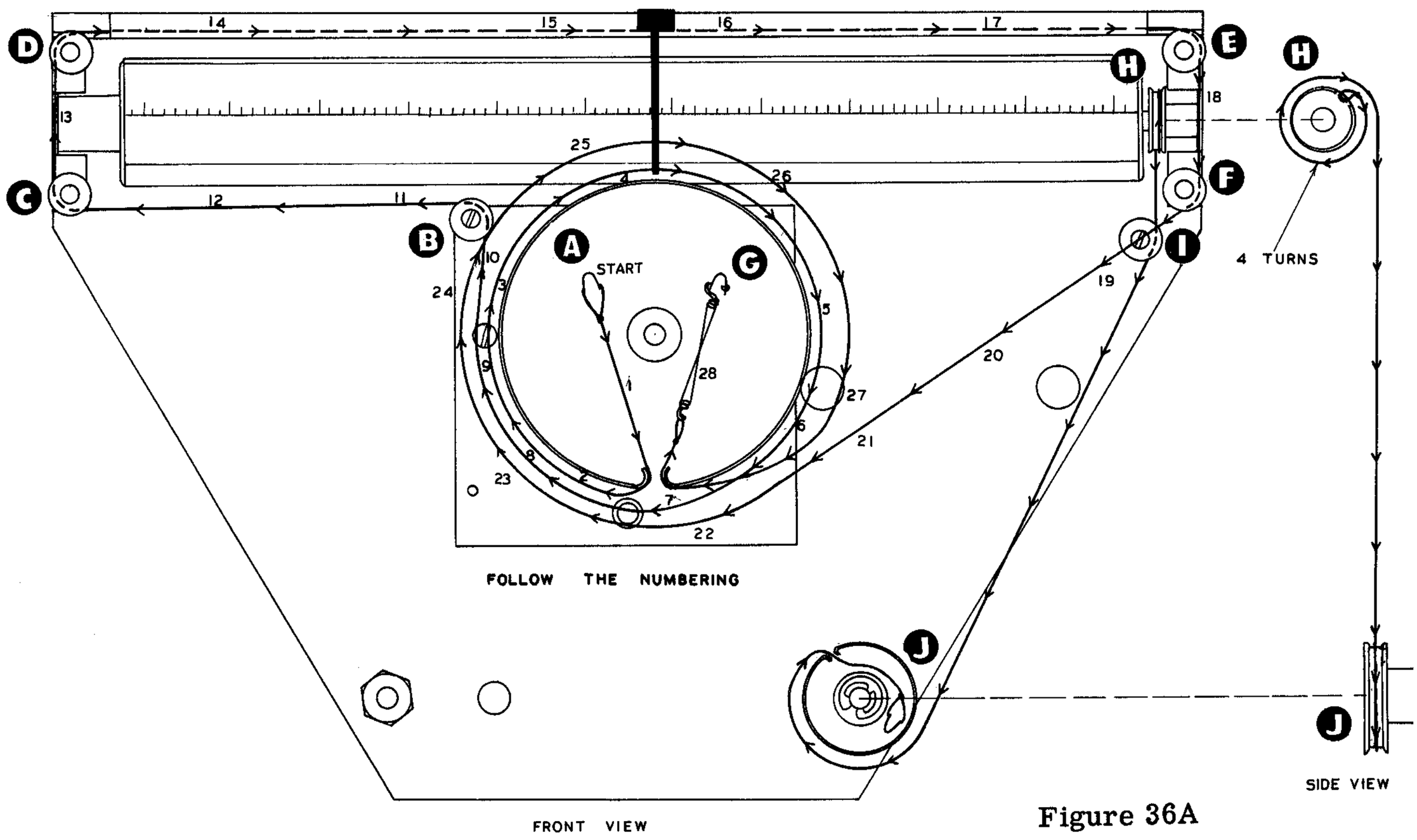

Figure 36A

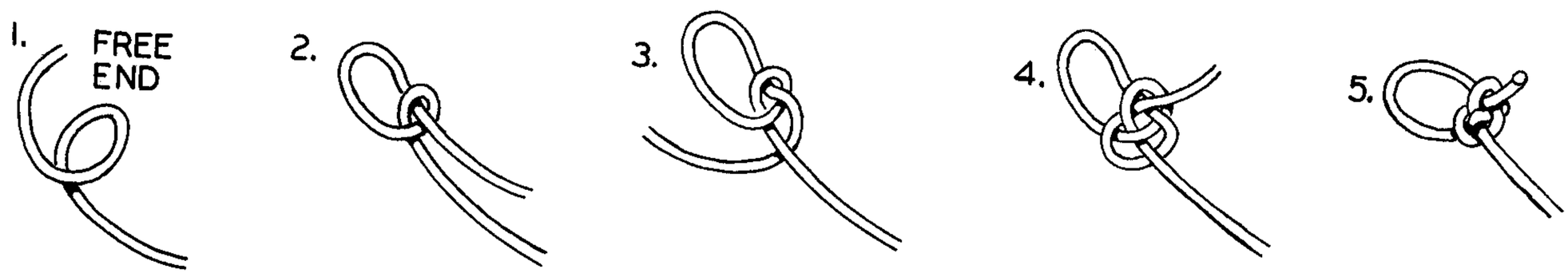

Figure 36B

( ) Referring to Figure 36, without pulling the string tight enough to rotate the dial drum, make one turn around the pulley on the band switch shaft with the free end of the cord from the pulley on the dial drum shaft. Make sure the cord is still in place on the dial drum pulley. Now cut the cord where it comes off the pulley on the band switch shaft and secure a small loop in the free end of the cord.

( ) Place the loop just formed over the hook on the band switch pulley and route the cord out through the gap in the pulley rim as shown in Figure 36A. Now rotate the pulley, which should still be free on the shaft, in a CW direction until, with the band switch in the 20 M position, the 20 M scale on the dial drum is foremost. Now tighten the pulley set screw temporarily after positioning the pulley on the band switch shaft so it is clear of the links and the cord runs parallel to the dial mechanism back plate. NOTE: If access to the set screw on the pulley is difficult, place the band switch in some other position and set the pulley so the proper scale is foremost.

( ) Make a final check of the band switch by rotating through its entire travel, noting that the various band dial calibrations appear foremost on the dial drum for the corresponding band switch position. If the 80 M calibration does not index properly, bend the CW stop on the final bandswitch to disable the stop. Use longnose pliers for access.

( ) Split one end of the line cord for a distance of 2" and strip and tin 1/4" of each lead. Referring to Figure 37, insert this end through the grommet in the line cord terminal cover, tie an electrician's knot as shown, and connect one lead to one line cord terminal (S2) and the other lead to the second line cord terminal (S2). Depending on the type of soldering iron used, it may or may not be necessary to remove the cover for this connection. In either case, secure the cover mounting screws after the connection has been made, using lockwashers under the nuts.

( ) Install the fuse plug on the other end of the line cord as follows: Open the plug to expose the screw terminals. Split the cord approximately 1" back from the end and separate the leads. Strip the end of the leads back 1/2" and tin the bare strands lightly. Position the cord in the "bell" of the plug, run the leads along the separate channels provided and connect the wires to the screw terminals with a hook in the same direction as the screw rotation.

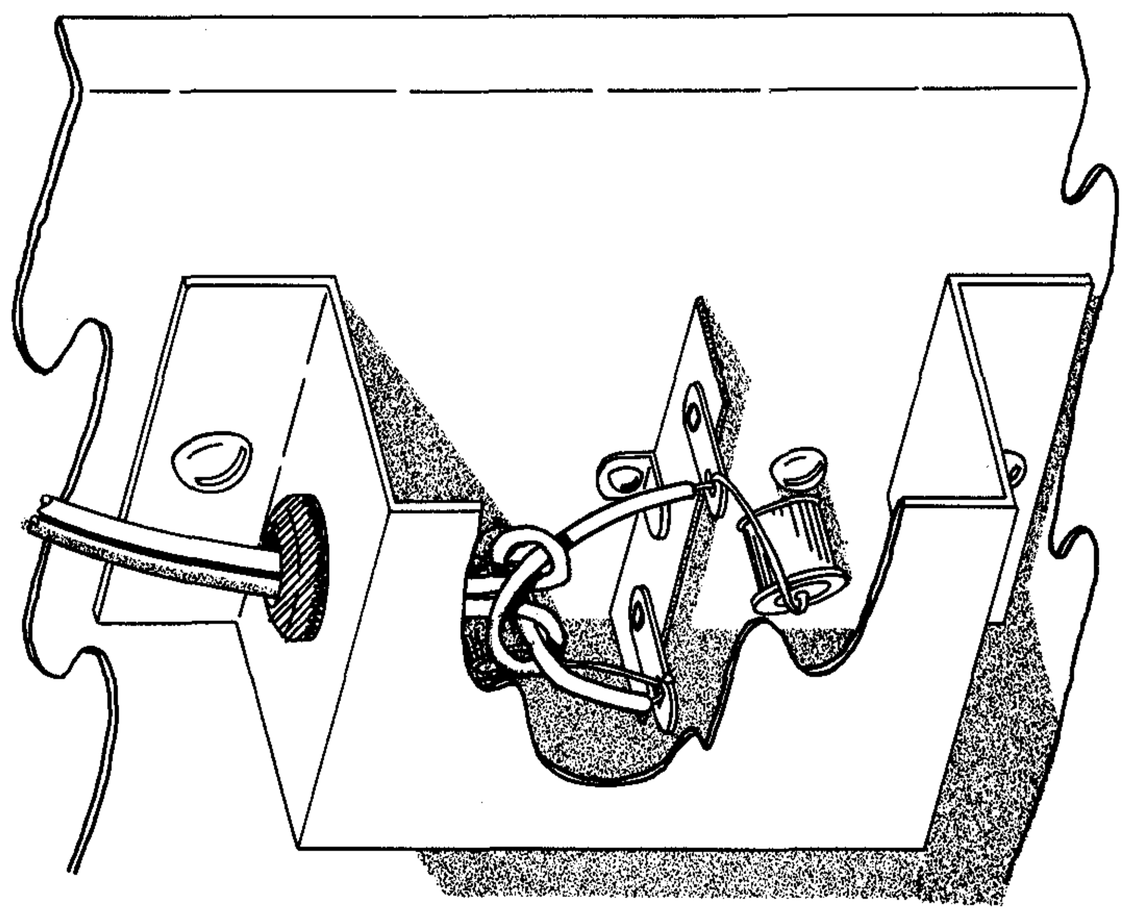

Figure 37

( ) Reassemble the plug and install two type 3AG fuses rated not higher than 8 amperes. Two 7 amp Slo-Blo fuses are supplied

NOTE: Use care in the following steps involving front panel assembly to prevent marring the panel and escutcheons.

Refer to Pictorial 24 for the following steps:

( ) On the front panel, mount a SPST toggle switch in the "POWER, OFF-ON" location. Adjust one mounting nut on the rear side of the panel so as to allow only enough bushing to project from the front panel for the second mounting nut. Place the lockwasher between the rear mounting nut and the panel and secure the switch by tightening the rear nut to prevent marring the front panel. Orient the switch as shown, in the horizontal position with the lugs down.

( ) Mount a SPDT toggle switch at the "TUNE-OPERATE" location in the same manner as above.

( ) Mount a DPST toggle switch in the "STANDBY-TRANSMIT" location in the same manner as above. Orient with the side of the switch marked "ON" toward the "TRANSMIT" position. Before mounting, carefully bend all four lugs down and out, as shown.

( ) Mount the HV indicator candelabra socket in the hole above the "TUNE-OPERATE" switch. Orient as shown and secure.

( ) Mount the meter switch at the "METER" position. Use a control solder lug on the back side of the panel and a flat washer and nut on the front. Rotate the switch full CCW and orient so the lug and rotor arrangement correspond to that in the pictorial. Place the solder lug pointing down, as shown.

( ) Mount the 25 K, 4 watt potentiometer at the "DRIVE" location. Orient as shown, with the lugs down. Use a control solder lug and position under lug 1 of the control. Use a flat washer and 3/8" nut on the front side of the panel.

( ) Mount the SPST pushbutton at the "SPOTTING" location. Use a control solder lug and orient the pushbutton and lug as shown and secure with a 3/8" nut and flat washer.

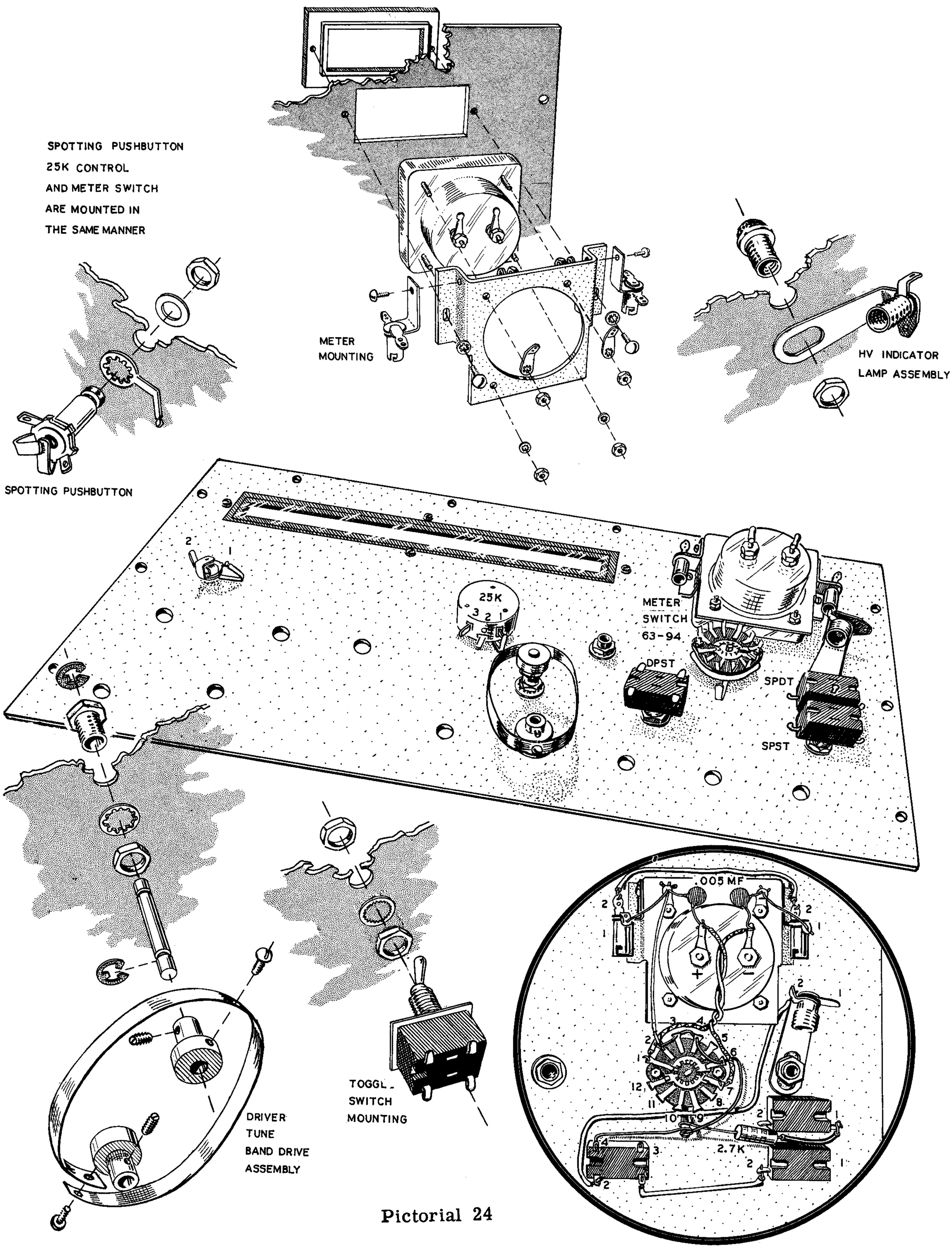

Pictorial 24

( ) Mount a 3/8" long shaft bushing with a 1/4" ID at the loading location, and a 9/16" long shaft bushing with a 1/4" ID at the driver location. Insert from the front side of the panel and secure with a 3/8" nut and lockwasher.

( ) Mount the long dial escutcheon on the front of the panel in the long narrow rectangular hole at the top of the panel. Secure with four #4-40 x 1/4" RHMS with #4 lockwashers under the screw heads. Use care in this and succeeding steps not to crack the glass in this escutcheon.

( ) Locate the meter mounting bracket, the meter, and two bayonet pilot light sockets. Mount the meter on the bracket, with the face between the flanges and the top of the meter toward the two holes in the flanges. Secure the meter firmly, but not too tightly, with the hardware supplied with the meter, placing a solder lug under each of the two top mounting nuts. Remove the shorting clip from the meter. Adjust the meter to read zero before mounting.

( ) Place the meter panel escutcheon in place on the front side of the panel in the smaller rectangular hole. Place the meter bracket assembly in place on the back side of the panel and, using #4-40 x 3/8" RHMS with lockwashers under the heads of the screws, secure the bracket and escutcheon to the panel by passing the mounting screws through the holes in the bracket flanges, through the panel holes and into the tapped holes in the escutcheon.

( ) Mount the bayonet sockets on each side of the meter bracket, using #6-32 x 1/4" RHMS hardware in the holes at the top of the bracket flanges. Orient the sockets in a vertical position, pointing down, as shown, and secure. Bend the lugs on the sockets to clear, as shown.

( ) Connect a #20 bare wire from lug 1 of the bayonet socket on the meter bracket nearest the panel edge (S1) to the near solder lug under the meter mounting nut (NS).

( ) Using orange hookup wire, connect lug 2 of the bayonet socket on the meter bracket nearest the panel edge (NS) to lug 2 of the other bayonet socket on the bracket (NS).

( ) Connect a #20 bare wire from lug 1 of the second bayonet socket on the meter bracket (S1) through the near solder lug under the meter mounting nut (NS), to lug 2 of the meter switch (NS).

( ) Connect a .005 mf disc capacitor between the negative meter terminal (nearest to panel edge) (NS) and the near solder lug under the meter mounting nut (S2).

( ) Connect a .005 mf disc capacitor between the positive meter terminal (furthest from edge) (NS) and the near solder lug under the meter mounting nut (S2).

( ) Connect a 2.7 K ohm (red-violet-red) 2 watt resistor between lug 1 of the "TUNE-OPERATE" switch (S1) and the ground lug under the meter switch (NS). Use sleeving on the lead to the switch.

( ) Using #18 hookup wire, connect lug 2 of the power switch (NS) to lug 1 of the plate switch (S1).

( ) Using orange hookup wire, connect lug 2 of the plate switch (NS) to lug 2 of the HV indicator lamp socket (S1). Route wire as shown and place flat against panel.

( ) Using #20 bare wire, pass one end through lug 6 of the meter switch (NS), through lug 4 (NS), through lug 3 (NS), through lug 2 (NS), and connect to the meter switch ground lug (NS). Now solder lug 6 (S1), lug 4 (S1), lug 3 (S1), and lug 2 (S2).

( ) Connect a #20 bare wire between lug 4 of the plate switch (S1) and the ground lug under the meter switch (S3).

( ) Bend the solder lug under the "DRIVE" control to touch lug 1 of the control and solder the connection.

( ) Bend the solder lug under the spotting pushbutton to touch lug 1 of the pushbutton and solder the connection.

( ) Using orange hookup wire, connect lug 1 of the meter switch (S1) to the solder lug on the negative terminal of the meter (S2). The negative meter terminal is nearest to the panel end.

( ) Using blue hookup wire, connect lug 7 of the meter switch (S1) to the solder lug on the positive terminal of the meter (S2). Twisting the blue wire around the orange, as shown, will give a neater appearance.

( ) Locate the driver tune shaft and insert in the shaft bushing at the "DRIVER" location on the front panel so the end 3/8" from the near groove extends out from the bushing on the front side of the panel. Snap E retaining rings in each groove on each side of the bushing so as to hold the shaft in place.

( ) Locate the two remaining band drive pulleys and the shaft band. Place a band drive pulley, hub first, on the end of the driver tune shaft extending from the back of the panel and secure with a #8-32 x 1/4" Allen head set screw so the pulley face and shaft end are flush with one another.

( ) Secure the center of the short band to the panel mounted pulley with a #6-32 x 1/4" RHMS through the hole in the band into the tapped hole in the pulley rim.

( ) Secure the ends of the band to the second pulley rim with a #6-32 x 1/4" RHMS so as to form a loop, with the second pulley hanging free. Secure the free pulley with its hub facing in the opposite direction as the panel mounted pulley or toward the inner front apron of the chassis.

( ) Remove any knobs placed on the shafts extending from the front apron of the chassis. Now remove the nuts temporarily installed on the shaft bushings at C, D, E and F. Remove the "E" retaining ring at D.

( ) Place the panel in position in front of the front chassis apron but do not slide over the bushings as yet. Notice that the panel will be held to the chassis by the bushings at C, D, E, and F. plus the mike connector at A, the gain control at B, and the key jack at G. Support the panel temporarily with a length of wire, as shown in Pictorial 25.

( ) Referring to Pictorial 25 at BO-15, connect the yellow wire to lug 2 of the "SPOTTING" pushbutton (S1). Leave the orange wire free temporarily.

( ) At BO-16, connect the blue wire to lug 2 of the "DRIVE" control (S1) and the orange wire to lug 3 of the "DRIVE" control (S1).

At BO-17, connect the wires in this group to the meter switch as follows:

( ) The yellow to lug 10 (S1).

( ) The white to lug 5 (S1).

( ) The blue to lug 8 (S1).

( ) The green to lug 9 (S1).

( ) The gray to lug 11 (S1).

( ) The brown to lug 12 (S1).

( ) Leave the two shielded wires at BO-18 free temporarily.

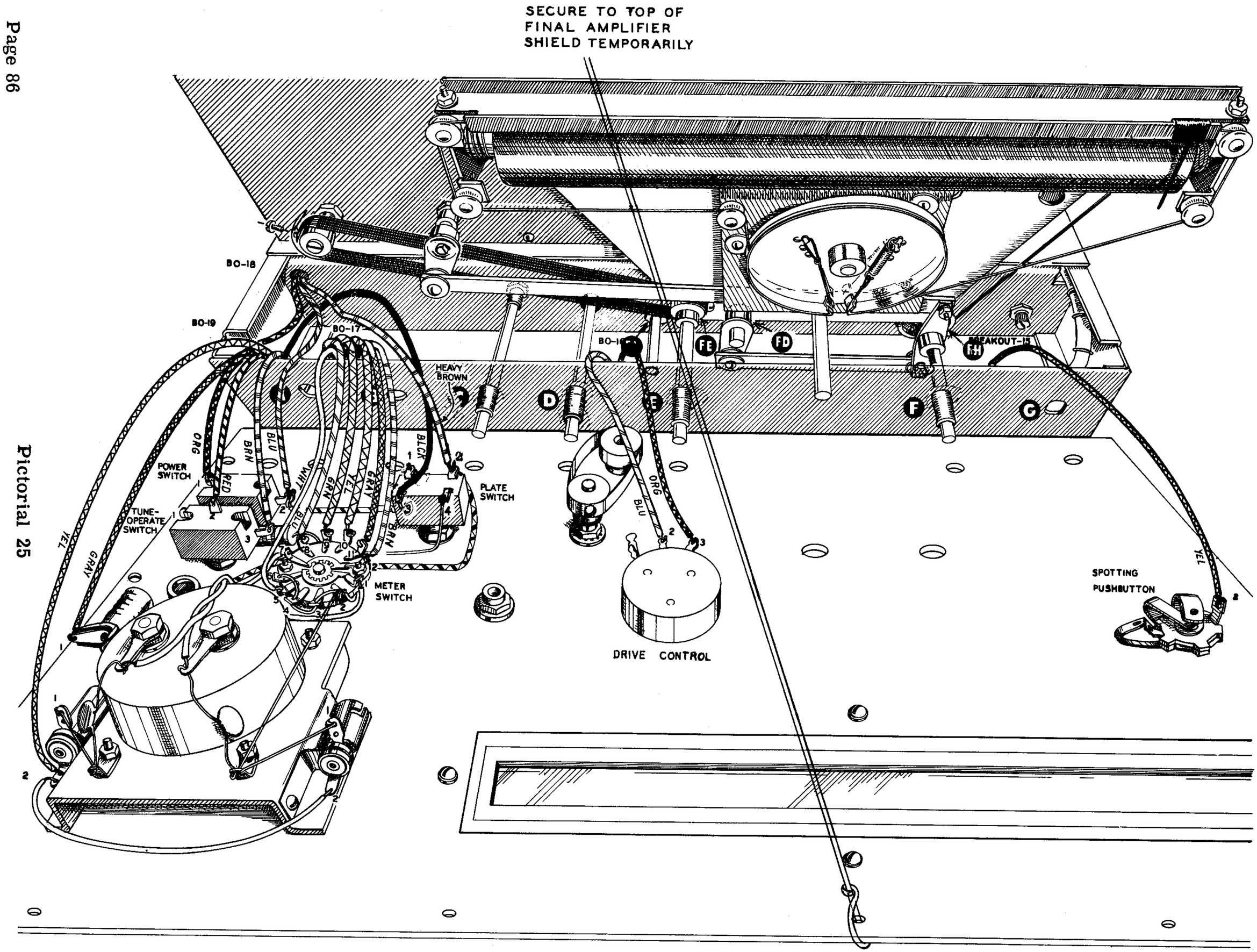
SECURE TO TOP OF
FINAL AMPLIFIER
SHIELD TEMPORARILY
BO-18
BO-19
BO-17
BO-16
HEAVY
BROWN
FE
FD
BREAKOUT-15
D
E
F
G
POWER
SWITCH
TUNE-
OPERATE
SWITCH
PLATE
SWITCH
METER
SWITCH
DRIVE CONTROL
SPOTTING
PUSHBUTTON
ORG
BRN
BLU
RED
WHT
GRN
YEL
GRAY
BLCK
ORG
BLU
YEL

At the left end of the harness, connect the remaining wires of BO-18 and BO-19 as follows:

( ) The black to lug 3 of the plate switch (S1).

( ) The heavy brown to lug 2 of the plate switch (S2).

( ) The blue to lug 2 of the power switch (S2).

( ) The brown to lug 3 of the "TUNE-OPERATE" switch (S1).

( ) The red to lug 2 of the "TUNE-OPERATE" switch (S1).

( ) The orange to lug 1 of the power switch (S1).

( ) The gray to lug 1 of the HV indicator lamp socket (S1).

( ) The yellow to lug 2 of the bayonet socket on the panel edge side of the meter bracket (S2).

( ) Locate the L shaped front panel escutcheon and place the Heathkit nameplate in position in the two small holes provided in the upper right end of the escutcheon. Clip the plastic studs to within 1/8" of the back of the escutcheon and secure the nameplate by touching the studs with a hot iron to form a retaining shoulder of plastic on the stud.

( ) Install a #47 pilot lamp in each bayonet socket on the meter mounting bracket. Now bend the sockets so the bulbs touch the meter case.

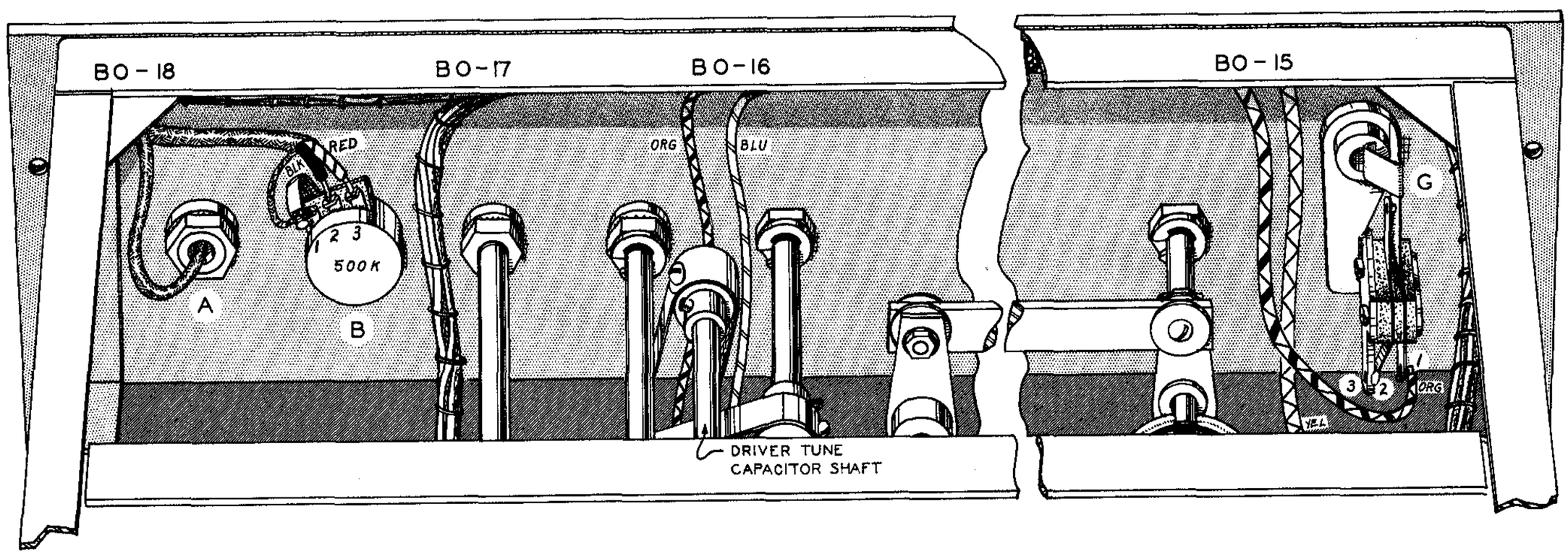

Figure 38

( ) Install the 3 watt candelabra base lamp in the HV indicator socket.

( ) Slip the panel over the bushings at C, D, E and F, placing the free band drive over the front apron. Notice the VFO tuning shaft comes through its mating clearance hole in the panel and no bushing is used. Now place the L shaped front panel escutcheon in place on the same bushings, then place 3/8" flat washers over the bushings and secure the panel and escutcheon lightly with 3/8" nuts on the bushings.

( ) Referring to Figure 38, mount the .5 megohm potentiometer with the 9/16" long bushing at the "GAIN" location, using a control solder lug on the rear of the front apron and a 3/8" flat washer and nut on the front of the panel. Orient the lugs and solder lug as shown, lugs to the left and the solder lug under lug 1 of the control. Do not secure tightly as yet.

( ) Mount the mike connector at the "MIKE" location on the panel, placing a 3/8" lockwasher under the nut on the rear side of the chassis front apron. Secure lightly.

( ) Mount the key jack at the "KEY" location and orient as shown. Use 3/8" flat washer and nut on the front of the panel. Do not secure tightly as yet.

( ) Adjust the bottom edge of the panel even with the chassis bottom, and then secure all the nuts on the components and bushings holding the panel to the chassis. Replace the "E" retaining ring at D.

( ) Rest the transmitter on its left end once again. At BO-18 connect the black lead from the two conductor shielded cable to lug 2 of the gain control (S1) and the red lead to lug 3 (S1). Bend the ground lug to touch lug 1 of the control and connect the shield pigtail to lug 1 of the control. Now solder the entire connection at lug 1 of the control (S2).

( ) Pass the center conductor of the remaining shielded wire through the contact hole in the mike connector and solder. Trim off any excess wire from the center contact.

( ) Connect the remaining orange wire at BO-15 to lug 1 of the key jack (S1).

( ) Bend lugs 2 and 3 of the key jack together and solder.

( ) Dress all wiring against the back of the panel to clear the moving parts.

( ) Slip the free band drive pulley over the driver tune capacitor shaft, hub first, and secure in line with the panel mounted pulley with a #8-32 x 1/4" Allen head set screw. Loosen or remove the panel mounted pulley shaft bushing, if necessary, to slide the free pulley on the capacitor shaft. Position with capacitor at full mesh with band drive full CW.

( ) Rotate the band switch through its entire travel and check to make sure the linkage clears all electrical connections on the back of the panel, especially those on the plate switch. Bend the switch lugs or reposition the linkage, if necessary.

( ) Referring to Figure 39, place the transmitter back in its normal position. Slide the plain 4" loading capacitor extension shaft through the bushing at the "LOADING" location on the front panel, through the bushing in the final amplifier shield, and into the shaft coupling previously installed. Position with about 3/8" of the shaft extending from the front panel bushing and secure the shaft coupling set screw.

( ) Locate the two aluminum plate caps and start #6-32 x 1/4" set screws in the tapped holes on the sides of the caps. Place the caps, one each, on the plate connections of the 6146 final amplifier tubes and secure with the set screws.

( ) Install the 6146 tubes in their sockets at V5 and V6, observing the keyway orientation between tube and socket. See Figure 39.

( ) Install a 6AQ5 tube at V4, observing orientation between tube pins and the socket.

( ) Screw one end of the 500 mmf, 5 KV ceramic capacitor on the vertically oriented spade lug mounted on final tuning capacitor lug 2. Secure firmly.

( ) Mount a #6 solder lug with a #6-32 x 1/4" RHMS on the other end of the 500 mmf, 5 KV ceramic capacitor. Bend up as shown.

( ) Mount a #6 solder lug on the top of each 6146 plate cap using a #6-32 x 1/4" RHMS. Orient as shown.

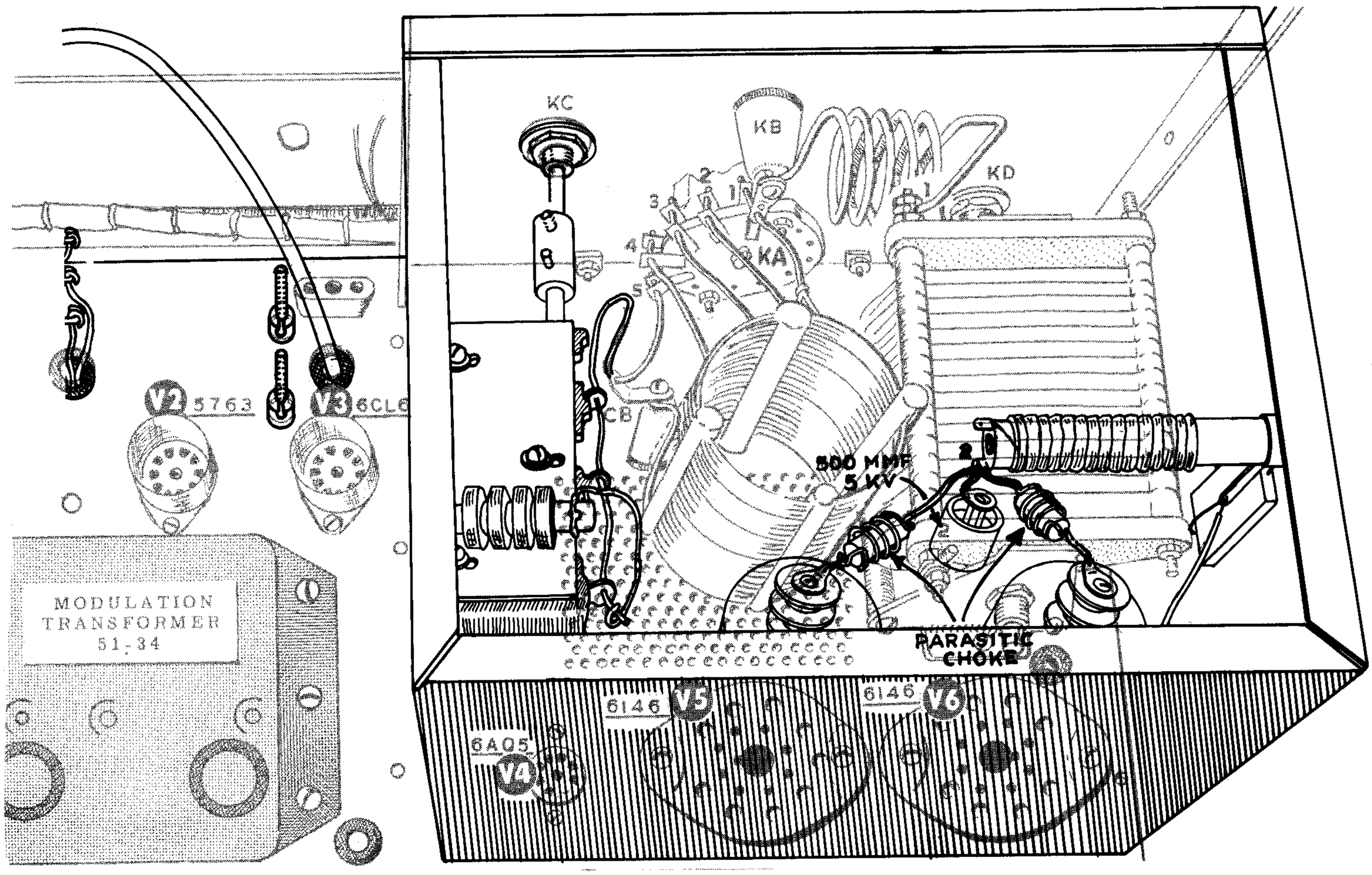

Figure 39

( ) Connect a parasitic choke, 45-13, (the small coil wound on a composition resistor) between the solder lug on the plate cap of V6 (S1) and lug 2 of the 1 mh RFC (NS).

( ) Pass one end of a second parasitic choke through lug 2 of the 1 mh RFC (NS) to the solder lug on the 500 mmf 5 K ceramic capacitor (S1). Connect the other lead to the solder lug on the plate cap of V5 (S1). Now solder RFC lug 2 (S2).

( ) Make sure all bits of wire, etc., are removed from the final amplifier shield compartment and then secure the perforated top of the compartment with twelve #6 sheet metal screws.

( ) Using orange hookup wire, connect lug 2 of the bayonet socket on the meter bracket furthest from the panel edge (S2) to lug 2 of the bayonet socket on the left side of the dial back plate (S2). See Figure 42.

( ) Referring to Figure 40, adjust the final dial drum position as shown by rotating the dial pulley on the band switch shaft until the proper position is obtained.

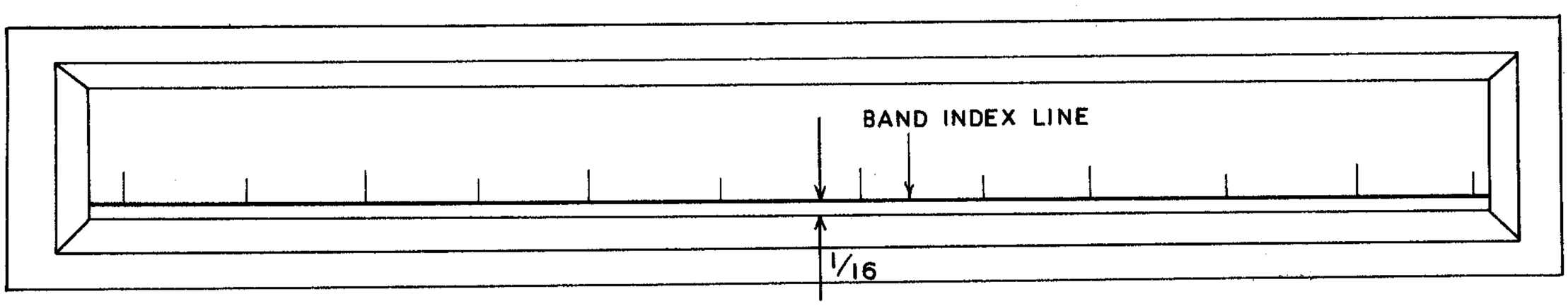

Figure 40

( ) Rotate all controls and switches on the front panel full CCW. Install the aluminum knobs with pointers oriented properly and using #8-32 x 1/4" Allen head set screws. Refer to Figure 41 for the knob size to use at each location. Use the #8-32 x 1/8" Allen head setscrew on the smallest knob. On flatted shafts, make sure the setscrew opposite the pointer is seated on the shaft flat. Notice that the three larger size knobs have two setscrews per knob. The VFO knob does not require any special positioning.

( ) Oil all shaft bushings, especially those in the final and driver tune mechanism, with light machine oil to insure smooth and easy operation.

TESTING, ADJUSTMENT, AND CALIBRATION INSTRUCTIONS

NOTE: See Figure 41 for a description and the location of all operational controls on the transmitter before beginning the tuning procedure. A knowledge of each control function will assist in accomplishing the tuning without difficulty.

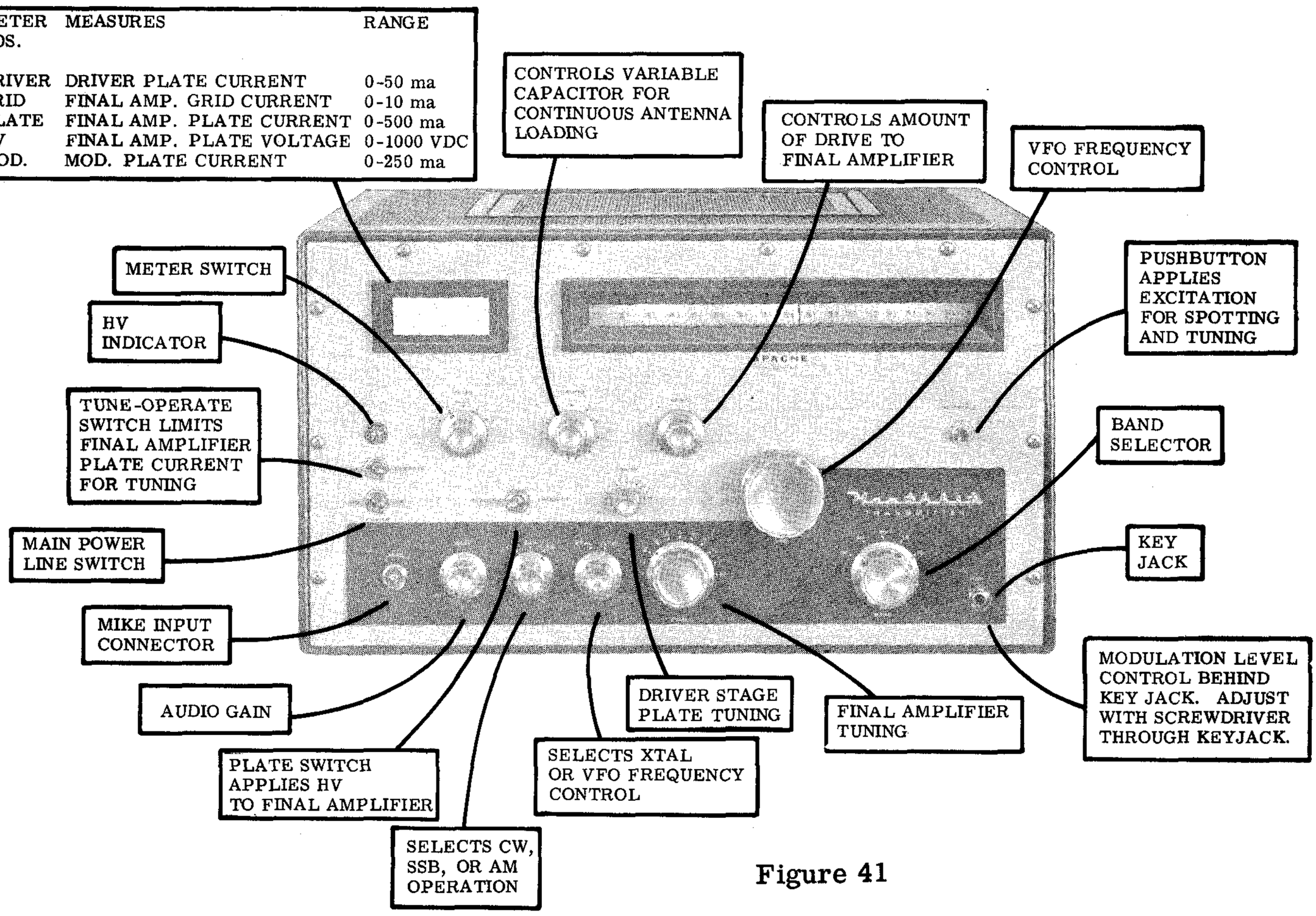

Figure 41

( ) Insert all remaining tubes in the proper sockets. Refer to Figure 42 for identification of sockets. Don't forget to install the three voltage regulator tubes below chassis. Insert the two OB2 regulators at V17 and V18 and the OA2 regulator at V19. Install the VFO dial lamps in their sockets. Also install tube shields where required, placing the corrugated heat shield insert in the VFO tube shield (V1).

( ) Plug a crystal into the crystal socket. Select a crystal that will fall in one of the lower amateur bands, preferably 80 or 40 meters.

( ) Connect a 100 watt light bulb to the RF output coaxial connector on the rear apron to act as a dummy antenna. This may best be done with the bulb inserted in a porcelain socket. One lead from the bulb should connect to the center portion of the connector and the other lead should be connected to the chassis. A short length of coaxial cable with a mating coaxial connector fitted on one end is ideal, but separate wires with a banana plug on one and an alligator clip on the other will suffice.

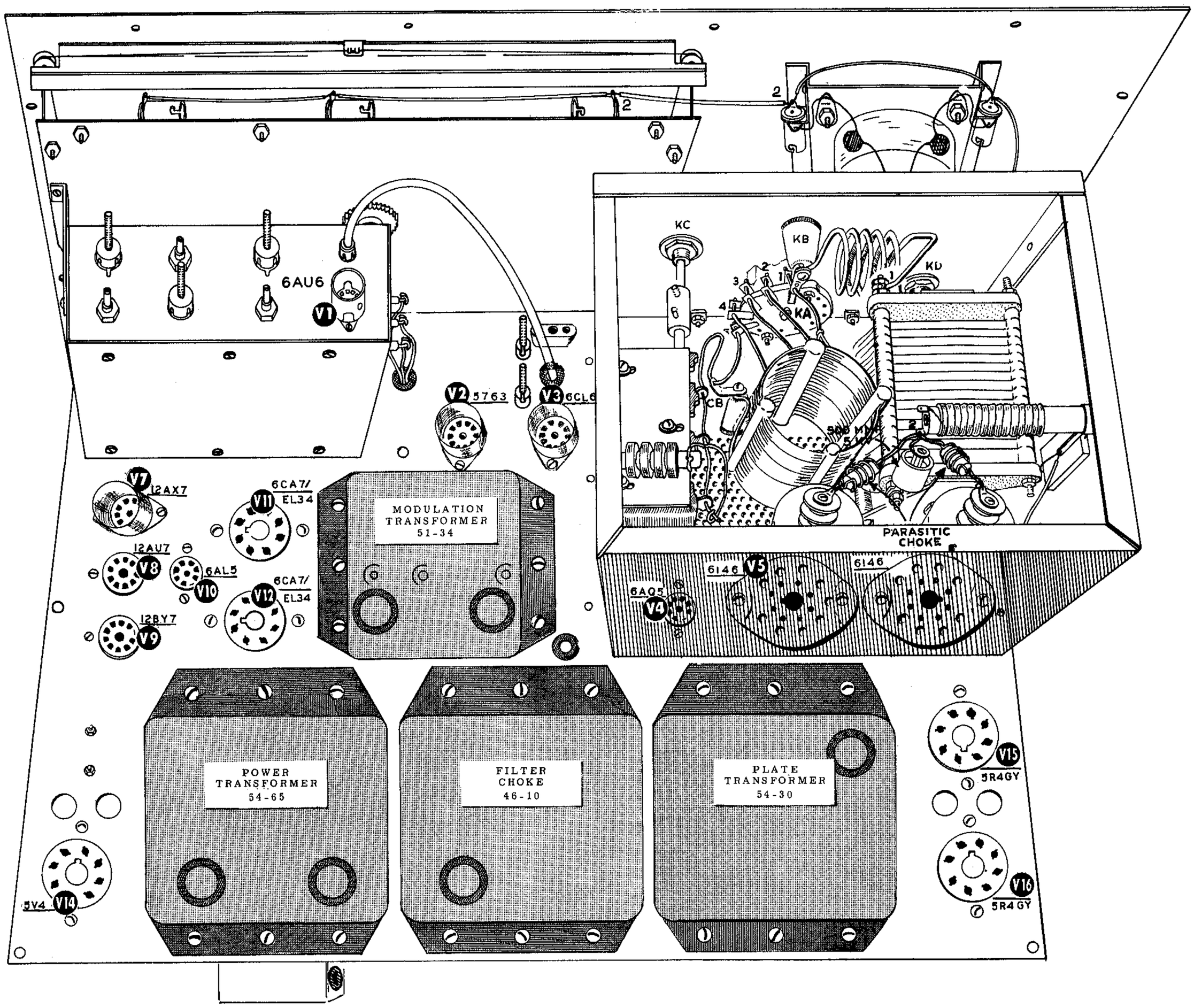

Figure 42

( ) Connect a jumper wire between pin 5 and pin 8 of the accessory socket temporarily. A short piece of solder inserted at each pin hole will suffice.

( ) Before applying power, set the controls and switches as follows:
Audio gain: Full counterclockwise
Power: Off
Xtal-VFO: Xtal
Drive: Full counterclockwise
Band: Set band switch to proper band for crystal frequency used.
Loading: Full counterclockwise
Plate: Standby
Mode Switch: AM
Meter: Grid
Driver Tune: 5
VFO: No special setting at this time.
Final Tune: 5
Tune-Operate Switch: Operate.
Clamp: Full counterclockwise (See Note 1).
Final Bias: Full counterclockwise (See Note 2).
Modulation Level: Full counterclockwise (See Note 3).
Modulation Bias: Full counterclockwise (See Note 4).

NOTE 1: This is the screwdriver adjustment at the hole nearest the front panel on the left side of the chassis.

NOTE 2: This is the screwdriver adjustment at the hole furthest from the front panel on the left side of the chassis.

NOTE 3: This is the screwdriver adjustment behind the key jack and can be reached with your narrow blade screwdriver through the jack.

NOTE 4: This is the screwdriver adjustment under the chassis in the modulater compartment.

CAUTION: BEFORE APPLYING POWER TO THE TRANSMITTER, IT SHOULD BE NOTED THAT LETHAL VOLTAGES ARE PRESENT BOTH ABOVE AND BELOW THE CHASSIS. CARE SHOULD BE EXERCISED NOT TO TOUCH ANY HIGH VOLTAGE POINTS WITH YOUR HANDS. WELL INSULATED TOOLS SHOULD BE USED FOR ANY ADJUSTMENTS BEHIND THE PANEL.

( ) At this point, the meter should be studied carefully to determine just how the meter reads for the various positions of the meter switch. First note that the meter has three scales: one from 0-10; one from 0-25; and one from 0-50. The scales should be interpreted as follows:

METER SWITCH POSITION	MEASURES	RANGE OF READING
Driver	Driver plate current	0-50 ma
Grid	Final amp. grid current	0-10 ma
Plate	Final amp. plate current	0-500 ma
Volts	Final amp. plate voltage	0-1000 volts
Modulator	Modulator plate current	0-250 ma

( ) Plug the transmitter into a 115 volt AC, 50-60 cycle outlet.

( ) Turn the power switch to ON and check to be sure that all tubes and dial lights light up. Switch the power off if any overheating is observed. It is normal that the neon bulb under the chassis glows at this time.

( ) If nothing unusual is observed under these conditions after a short time, advance the drive control about one-quarter of a turn. Depress and hold the spotting pushbutton while adjusting the driver tuning control for a peak reading on the meter. CAUTION: Do not exceed a reading of 7 ma for more than an instant. See if at least 6 ma of drive is available through rotation of the drive control with the driver tuning peaked. Leave grid drive set at 6 ma. Note position of grid drive control with 6 ma on the meter so you can return to the setting later. Rotate the meter switch to the driver position. The driver plate current should not exceed 50 ma with 6 ma of grid drive.

( ) Releasing the spotting pushbutton will remove the excitation entirely. If 6 ma of grid drive is available without excessive driver plate current, the exciter stages are operating correctly. Return the meter switch to the grid position.

( ) Move the Xtal-VFO switch to VFO and, while depressing the spotting pushbutton again, peak the driver tuning for peak grid drive. Increase or decrease the drive control to obtain the maximum 6 ma reading. The VFO frequency dial indication is not significant at this time. VFO calibration will be accomplished later. Once again, 6 ma of available drive indicates that the VFO is functioning properly.

NOTE: If a crystal frequency in a band other than 80 or 40 meters is being used for the testing procedure, it is possible that insufficient drive may be available. This is because the buffer coils have not yet been adjusted. In this case, any indication of drive is evidence of satisfactory

operation of VFO, oscillator, and driver stages. If an 80 or 40 meter crystal is not immediately available, skip the steps for final amplifier testing until VFO calibration and adjustment of the buffer coils is complete. Do not use the VFO for frequency control during final amplifier test until it is calibrated, due to the possibility of out-of-band radiation.

( ) To test the final amplifier, return the Xtal-VFO switch to Xtal and the drive control to full counterclockwise, reducing the drive to zero. Move the meter switch to plate and turn the plate power on (TRANSMIT). Turn this switch off immediately in case of an arc, apparent overload, or an excessive meter reading (over 250 ma). Normally, the meter should not read, or should only slightly read, up scale. Turn off plate power (STANDBY).

( ) Rotate the mode switch to SSB position. Turn the plate power on. Adjust the bias control on the left side of the chassis until the meter reads 55 ma. This establishes the final amplifier operating condition for class AB1, service. Turn off the plate power and return the mode switch to AM position.

( ) Turn the plate power on once again and adjust the clamp control on the left side of the chassis until the meter reading just returns to zero. If the meter did not read when the plate switch was thrown, rotate the clamp control until the meter moves off zero and then adjust until the meter just returns to zero. Turn plate power off.

( ) Reset the drive control to the 6 ma position previously noted and, while depressing the spotting pushbutton, repeak the driver tuning, observing the grid current on the meter. Turn the tune-operate switch to tune position and the meter switch back to plate position and turn on the plate power. The meter should read approximately 100 ma. Rotate the final amplifier tuning control for a minimum reading at the dip. Now return the tune-operate switch to operate position. The plate current should now read in the lower portion of the scale.

( ) With one hand, begin slowly rotating the loading control while maintaining a dip with the final tuning control. As the loading control is rotated, the minimum meter reading should increase, as should the light bulb's brilliance. Increase the loading until a normal operating load of 250 ma is reached. Recheck the amount of grid drive. If the reading has dropped, adjust the drive control and/or tuning to restore the 6 ma reading, then recheck the final plate current. Turn the plate power off.

( ) Place the meter switch in the "MOD" position. Carefully prop the front of the transmitter up to gain access to the modulator bias control. Turn the plate power on and adjust the modulator bias until a reading of 50 ma is obtained. Turn the plate power off and place the transmitter in its normal position again.

( ) To test phone operation, connect a high impedance microphone to the mike input connector, and rotate the audio gain control to the position that gives the amount of speech clipping desired. When the input to the speech amplifier is 25 mv, RMS, the approximate peak output voltage obtained from a high impedance crystal or dynamic microphone, 10 percent rotation of the audio control will give 0 DB of clipping, 20 percent will give 9 DB, 30 percent will give 15 DB, 40 percent will give 19 DB, 50 percent will give 21 DB, and 60 percent will give 25 DB. The recommended level of clipping for general communication is about 12 DB, which is produced with about one-quarter of a turn from full CCW on the audio gain control. Turn the plate power on and, while whistling steadily into the microphone, rotate the modulation level control (behind the key jack) until the meter peaks at about 125 ma. Without modulation, the reading will be the previously set 50 ma. The light bulb used as a dummy load should peak upward in brilliance, with peaks in modulation. Downward modulation indicates a need for touching up of the final tuning or more grid drive. As the amount of clipping is increased, maintain 125 ma peak reading with the level control, if necessary. Small background noises should cause the meter reading to flicker slightly from the resting value. This indicates that the clipping circuit is operating satisfactorily.

NOTE: While it may be individually desired not to introduce clipping, the TX-1 modulator is designed on the premise that the results obtained with clipping will prove its merit and the controls have so been arranged. Once conditions are set for a particular microphone, only the front panel gain control need be adjusted occasionally to meet varying audio requirements.

( ) Rotate the meter switch to the high voltage position. The meter should read about 750 volts. Turn the plate power off.

( ) To check CW operation, insert the plug from a key into the key jack and rotate the mode switch to CW position. With the meter switch in the plate position, turn the plate power on, When the key is depressed, the dummy load should light and the plate current should rise to the operating load of 250 ma. Increase or decrease the loading as necessary.

VFO CALIBRATION

If the kit builder has access to a commercial frequency standard, an electronic counter of good quality, a surplus frequency standard of the LM or BC series, or a high quality communications receiver with a built-in crystal calibrator, such as the Heathkit RX-1 "Mohawk", they are excellent for calibration. The only other practical alternative is to accumulate as many crystals as possible for the 80, 20, and 10 meter bands. The crystals should preferably be near the band edges. The crystals may be inserted in the transmitter crystal socket and compared to the VFO frequency by means of a nearby receiver having a BFO. If a frequency meter is used, the frequency meter and VFO signals can be beat against each other in the receiver. A frequency counter, of course, can count and display the VFO frequency directly. It will only be necessary to calibrate the 80, 20 and 10 meter bands, since the 20 and 15 meter bands of the "Apache" both use a common VFO switch position as do the 40 and 10 meter bands. Thus, when the 20 and 10 meter bands are calibrated, the 40 and 15 meter bands are also calibrated automatically.
Before beginning calibration, allow the transmitter, frequency meter, and receiver to warm up for one-half hour or more. During the calibration procedure, the drive control should be full counterclockwise, the mode switch on CW position, and the plate power off. If a frequency meter is used for calibration, the frequency meter signal and the VFO signal should be zero beat against each other in a receiver with the BFO off. Under these conditions the VFO signal is the same frequency as the frequency meter. When using crystals for calibration, set the receiver to the crystal frequency with the BFO on and zero beat the BFO in the receiver. Align the VFO for zero beat in the receiver without changing the receiver tuning. Under these conditions, the VFO signal frequency is the same as the crystal frequency.

Aside from these slight differences in measurement technique, the following procedure may be used for either method of calibration. Refer to Figure 43 for location and identification of the various calibrating adjustments.

NOTE: It should be noted that the trimmer capacitors (G, E, and F in Figure 43) are used to determine the frequency spread covered on the dial while the coil slugs (40-115, 40-116B, and 40-116A in Figure 43) are used to set a definite frequency point on the dial. The slugs are set to the calibration frequency near the low end of the dial and the trimmers are adjusted so that the calibration frequency at the high end of the band coincides with the dial reading. These two adjustments interact with each other and, therefore, will have to be adjusted alternately until optimum overall calibration is obtained. All trimmer capacitors should be set to full open (unmeshed) before starting calibration, as indicated by the marks placed on the shafts and chassis when the VFO sub-chassis was mounted. Make sure the steps regarding the setting of the tuning capacitor in relation to the dial mechanism were not overlooked or done improperly.

For 80 meter calibration, set the dial to 3500 KC, if a frequency meter is used, or to the crystal frequency used near the low end of the band. Make sure the band switch is in the 80 meter position. Adjust slug 40-115 for zero beat in the receiver. Note that the zero beat will be against the 3500 KC output of a frequency meter, if used, or against the receiver BFO as previously set to zero beat against the crystal oscillator. Now use a crystal (returning the transmitter to crystal

operation) near the high end of the band or move the frequency meter up to a frequency of 4000 KC. Reset the receiver as in the previous step. Tune the VFO to zero beat at the high end of the band and note the dial reading. Starting with the trimmer G plates at full open (unmeshed), the dial reading should be lower than the actual calibration frequency. Adjust trimmer G slightly

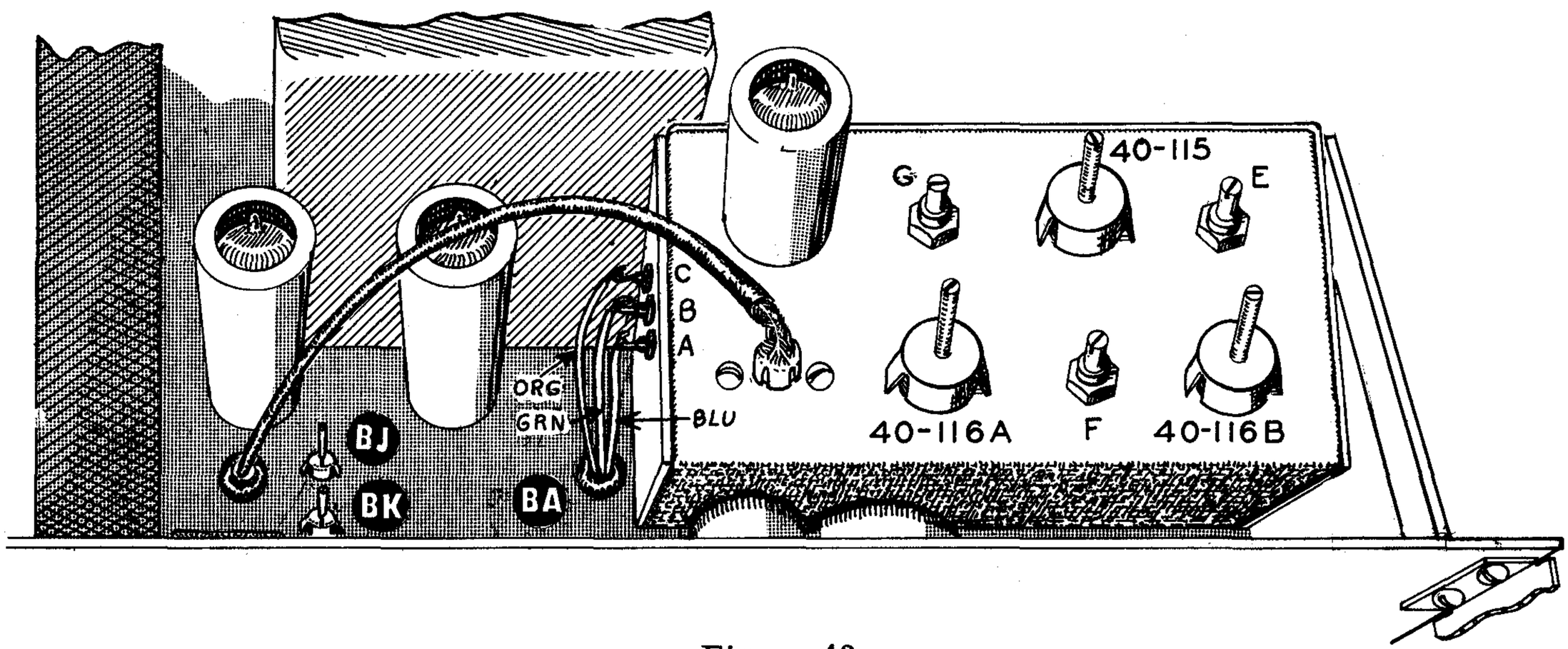

Figure 43

clockwise. Readjust slug 40-115 for zero beat once again at the lower calibration frequency. Move the VFO up and check the high end and it should be found that the dial reading is closer to the actual frequency than before. Adjust trimmer G again in the clockwise direction and repeat this process until calibration is achieved at both ends of the band.

Repeat the procedure outlined above for the 20 and 10 meter bands. Move the band switch to the appropriate band for each calibration procedure. The receiver and signal sources (crystal or frequency meter) must operate between 7000 and 7175 KC for the 20 meter calibration and between 7000 and 7425 KC for the 10 meter calibration. Use trimmer E and slug 40-116B for the 20 meter calibration and trimmer F and slug 40-116A for the 10 meter calibration.

After VFO calibration is complete, adjustment of the buffer coils may be accomplished. Set the band switch to the 10 meter position and the VFO dial to the middle of the band (approximately 28.8 mc). Advance the drive control until a small grid current reading can be obtained with the driver tuning peaked. Adjust slug BJ (as shown in Figure 43) for a maximum grid current reading. Once again, do not exceed 6 ma for more than an instant.

Now switch the band switch to the 15 meter position and set the VFO dial to the middle of the band (approximately 21.3 mc). Peak the drive once again at a low reading and adjust slug BK (Figure 43) for a maximum reading on the meter.

If a VTVM or multimeter is available, check the voltage to ground at terminal strip BG-1 after adjusting the buffer coils. If considerably in excess of -85 volts and more than adequate drive is available under normal operating load, detune slugs BJ and BK until a reading of approximately -85 volts is obtained at terminal strip BG-1. As before, make this adjustment with the band switch at 10 meters for slug BJ and 15 meters for slug BK.

This completes testing, adjustments and calibration of your TX-1 transmitter.

IN CASE OF DIFFICULTY

Mistakes in wiring are the most common cause of difficulty. Consequently, the first step is to recheck all wiring against the pictorials and schematic diagrams. Often having a friend check the wiring will locate an error consistently overlooked.

With miniature sockets, there is a possibility of shorts between adjacent socket terminals due to the close spacing. This should be checked and if any doubt exists, the terminals should be pried apart until obvious spacing can be seen between them.

Sometimes apparently good solder connections will have an insulating coating of rosin between the wire, the terminal and the solder. This is often the case when insufficient heat was applied in soldering. An ohmmeter check of any questionable connections will test for this condition. Naturally, all voltages should be "off" for such tests.

The transmitter is fused at the line cord plug. A type 3AG fuse is required on each side of the line plug with a rating not in excess of 8 amperes. Should it be found that fuses consistently blow whenever the equipment is plugged in and the POWER switch is turned ON, resistance tests of the low voltage power supply should be made in accordance with the resistance chart. If a fuse blows whenever the PLATE switch is moved to the ON position, the high voltage power supply should be checked with an ohmmeter as outlined in the chart on Page 99. In either case, it is important that the power switches be OFF and the line plug removed when the resistance measurements are made. As additional insurance against shock, a screwdriver blade should be used to short from the chassis to the hot end of the bleeder resistor and from the chassis to each of the filter condensers so that they will be thoroughly discharged.

Be sure to reread the circuit description on Page 99, so that "cause and effect" reasoning may be employed as the search for trouble progresses. If some difficulty still persists after the steps outlined have been completed, attempt to localize the trouble to a particular stage in the transmitter circuit. Use the tuning procedure and voltage chart on page 98 as a basis for localization and refer to the block diagram and schematic to visualize circuit relationships. The panel meter and station receiver are extremely valuable tools to use in locating trouble.

RF CIRCUITS

If a grid current reading cannot be obtained at the panel meter, the receiver may be used to check VFO and/or crystal oscillator operation. Connect a short piece of insulated wire to the receiver antenna terminal and bring the wire near the VFO or crystal oscillator tube. Tune the receiver, with the BFO on, to determine if a signal is being generated by the respective oscillator circuits. In VFO operation, both stages should show signal output and the OA2 voltage regulator under the chassis should show a blue glow, indicating B+ is present. If this tube is dark, check the B+ supply. In crystal operation only the oscillator stage will show output, and the OA2 should be dark since the VFO is inoperative in crystal control.

If it should be determined that both oscillator stages are functioning properly but still no grid drive can be obtained on the meter, turn the meter switch to the DRIVER position and advance the DRIVE control fully clockwise. The meter should read upscale, indicating plate current in the driver stage. No reading shows a defective driver tube, lack of DC operating potentials on the driver stage, an open cathode, screen or plate circuit, lack of coupling between oscillator and driver stages, or detuned oscillator coils.

If, on the other hand, driver plate current can be obtained on the meter, try adjusting the DRIVER control for a dip in plate current. No dip could be caused by improperly connected driver tank coils or a poor connection to the driver tuning capacitor.

Should it be found that a dip can be obtained in driver plate current when tuning the driver, but still no grid current is available, the 6146 grid circuit may be open at some point. Note that the

grid circuit includes a 1.1 mh RF choke, a shunt resistor for the meter, a 2.2 K ohm grid resistor and bias supply bleeder resistors. If an ohmmeter is available, measure the overall grid circuit continuity with the power turned off. The reading should be in the vicinity of 6 K ohm, depending on the bias adjust setting. If such a test shows an open, check each grid circuit component separately to find the defective component or connection. Check to make sure the contacts on the rear deck of the mode switch are making good contact.
Assuming that grid current is available in the correct quantity, difficulty in the 6146 stage may manifest itself in the form of an excessive plate current reading, insufficient plate current or inability to obtain resonance when tuning the final amplifier.

Excessive plate current could indicate a shorted RF bypass capacitor in the final stage, lack of grid bias, detuned final tank circuit or miss-set loading control.

Insufficient plate current would suggest low plate voltage and this can easily be checked with the panel meter in the VOLTS position. If plate voltage is present but plate current is still low, the clamp control may be improperly adjusted (see tuning procedure for proper adjustment) or the screen circuit may be shorted or open. With the mode switch in "SSB" position and the plate power on the two OB2 regulator tubes in the final amplifier grid compartment should glow. Under all other conditions they will be dark.

Failure to reach resonance when tuning the final tank circuit could indicate an incorrectly wired band switch or loading switch, a shorted loading capacitor or any other short or ground in the final pi-network circuit. Also, do not overlook the possibility that the frequency controls in previous stages may be incorrectly adjusted (see tuning procedure).

AUDIO CIRCUITS

Inability to obtain modulation when following the procedure outlined in the tuning instructions (remembering that the modulation level control behind the key jack, as well as the front panel gain control, must be adjusted) could be indicative of trouble in the speech amplifier or modulator circuits, or may simply show a defect in the microphone or cable. Isolate the trouble by disconnecting the microphone connector at the panel. Move the meter switch to MOD. and set the audio GAIN control fully counterclockwise. Touch the center portion of the microphone connector on the panel with your finger and advance the audio gain control slowly. The meter will show modulation if the speech amplifier and modulator circuits are all right, pointing to trouble in the microphone or cable. No reading at all on the meter suggests a lack of screen voltage on the modulator. Check the wiring at the CW-PHONE switch. Screen voltage is obtained from the LV B+ supply through the relay. If the meter reads up to about 50 milliamperes, however, but does not increase above this value with signal input, the trouble is more than likely in the speech amplifier portion of the circuit.

With the high voltage PLATE switch OFF, speech amplifier output can be checked at the modulator control grids. Care should still be exercised, however, because the low voltage power supply is still on. Connect a headphone or an AC voltmeter from grid to grid on the two modulator tubes and apply audio signal to the input of the speech amplifier by touching your finger to the center part of the microphone connector on the panel. No output under this condition could mean that one of the speech amplifier tubes is defective. Have them tested or substitute new ones. The speech amplifier portion of the transmitter is straightforward audio circuitry and the conventional test procedure for such circuits can be applied.

Measurements made with Heathkit Model MM-1 VOM (20,000 ohms/volt) with controls set as follows unless otherwise noted; Power, ON; Test-Operate, OPERATE; Band Switch, 20 M; Mode, AM; Xtal-VFO, VFO; AF Gain, FULL CCW; Drive, 6 MA; Loading, 250 MA; Plate Power, OFF; Transmitter Chassis, GROUNDED; Mod. Level Control, FULL CCW.

NOTE: All voltages are DC unless otherwise noted.

PIN	1	2	3	4	5	6	7	8	9
V1 (VFO 6AU6)	(2)-25 (3)-1.5	0 GND	0 GND	(4) 6.3AC	(5) 150	(6) 120	0	—	—
V2 (Driver 5763)	(1) 370	—	0 GND	6.3AC	0 GND	(7) 140	0	-25 (8)-100	—
V3 (Buffer 6CL6)	0 GND	-105 (1) -3	—	6.3AC	0 GND	(1) 370	0 GND	(1) 220	—
V4 (Clamp 6AQ5)	—	0	0 GND	6.3AC	(11)150 (12)70	(11)150 (12)70	(9)-18 (10) 1	—	—
V5) V6) 6146 Final	0 GND	0 GND	(11)150 (12)70 (13)40 (20)210	—	-50 (15)-150 (16)-85 (14)-50	—	6.3AC	0 GND	0 GND
V7 (Sp. Amp 12AX7)	100	1.7	0	6.3AC	6.3AC	150	0.5	0	(19) 750
V8 (Sp. Amp 12AU7)	170	0	9	6.3AC	6.3AC	130	0	9	0 GND
V((Mod. Drive 12BY7)	11	0	—	6.3AC	6.3AC	0 GND	370	370	0 GND
V10 (Clip; 6AL5)	1.7	1.7	0 GND	6.3AC	7	—	0 GND	—	—
V11) V12) EL34 Mod	0	0 GND	(9) 750	(9) 360	-35	-35	6.3AC	0	—
V14 (Rect 5V4)	—	(17)400 See Note 1	—	310AC	—	310AC	—	(17)400 See Note 1	—
V15) V16) 5R4 Rect	—	(9)750 (18)See Note 2	—	(9) 900AC	—	(9) 900AC	—	(9)750 (18)See Note 2	—

(1) Measured with spotting pushbutton depressed.
(2) Measured at VFO feedthrough A.
(3) Measured at VFO feedthrough A with spotting pushbutton depressed.
(4) Measured at VFO feedthrough B.
(5) Measured at Terminal Strip BB-1.
(6) Measured at VFO feedthrough C with spotting pushbutton depressed.
(7) This voltage will vary with Drive Control setting.
(8) Measured at Terminal Strip BG-1 with spotting pushbutton depressed.
(9) Measured with Plate Power ON.
(10) Measured with Plate Power ON and Drive Control Full CCW.
(11) Measured at Mode Switch Lug GD-23 with Plate Power ON.
(12) Measured at Mode Switch Lug GD-23 with Plate Power ON and Drive Control Full CCW.
(13) Measured at Mode Switch Lug GD-23 with Plate Power ON and Test-Operate in TEST position
(14) Measured at Terminal Strip CI-2 with Mode Switch in SSB position, Drive Control Full CCW, and Pin 5 jumpered to Pin 8 on Acc. Socket.
(15) Measured at Terminal Strip CI-2 with Mode Switch in SSB position, Drive Control Full CCW (no jumper on Acc. Socket).
(16) Measured at Terminal Strip CI-2 with spotting pushbutton depressed.
(17) 5 VAC between V14-2 and V14-8.
(18) 5 VAC between V15-2 and V15-8.
(19) Measured at Terminal Strip GC-2 with Plate Power ON.
(20) Measured at Mode Switch Lug GD 23 with Mode Switch in SSB position, Drive Control Full CCW, and Pin 5 jumpered to Pin 8 on Acc. socket.

NOTE 1: V14-2 & V14-8 are 400 VDC above chassis. Measure these filament voltages only if absolutely necessary and use extreme care. VTVM cases will be at B+ level during measurements. Turn off all power while connecting leads.

NOTE 2: Be sure Plate Power is OFF or pins will be 800 VDC above chassis.

RESISTANCE TABLE

Measurements made with Transmitter disconnected from AC line and Mode Switch in CW position.

CIRCUIT	TEST POINT	RESISTANCE TO GROUND
Low Voltage Supply	Low Voltage Filter Output	32 K ohm
High Voltage Supply	High Voltage Bleeder	30 K ohm
Bias Supply	JP-1	8 K ohm
Mod Bias Supply	Lug 2 of Selenium Rectifier	13 K ohm
Final Grid	6146 Grid Buss	5 to 7 K ohm (Varies with Bias Control)
VFO Screen	Feedthrough C	69 K ohm
VFO Grid	Feedthrough A	33 K ohm
OSC Screen	Pin 8 of 6CL6	55 K ohm
OSC Grid	Pin 2 of 6CL6	150 K ohm
Driver Grid	Pin 8 of 5763	20 K ohm
Driver Screen	Pin 6 of 5763	0-20 K ohm (Varies with Drive Control)
Final Screen	Mode Switch Lug GD-23	60 K ohm
Final Screen with Tune-Operate Switch in TUNE position	Mode Switch Lug GD-23	2.4 K ohm

INSTALLATION OF TRANSMITTER IN CABINET

( ) Install the four large rubber feet on the cabinet. Use #8-32 x 3/8" hardware, inserting screw through the rubber foot, and then through the cabinet bottom. Use #8 lockwashers under the nuts. Tighten securely.

( ) Place the transmitter in front of the cabinet and pass the line cord through the opening in the back of the cabinet. Now slide the transmitter onto the rails and into the cabinet while guiding the line cord through the opening in the back. Use ten #10-32 Philips head screws to fasten the front panel to the cabinet and eight #10 sheet metal screws through the back of the cabinet into the rear chassis apron.

( ) Place the rear apron diagram adhesive label on the back of the cabinet just above the opening on the solid metal between the two center sheet metal screws.

Your Heathkit TX-1 transmitter is now ready for installation and operation.

OPERATION

The tuning procedure outlined previously will also apply when loading an actual antenna. Some special cases involving particular antenna types will require special consideration and will be covered under antennas.

A point not covered under the tuning procedure is the method by which the VFO may beat against an incoming signal without placing the transmitter on the air. When operating either phone, CW, or SSB, depressing the spotting pushbutton on the front panel will provide a signal from the exciter stages of the transmitter that can be picked up on the receiver. Then the VFO can be tuned for zero beat against the incoming signal. If the frequency excursion is more than a few kilocycles, it may be necessary to retune the driver stage. When the transmitter is again placed on the air, the final amplifier may require touching up to compensate for the frequency change.

ACCESSORY SOCKET, CONTACTS, AND COAX RECEPTACLE

See Figure 44 for a diagram of the accessory socket. This is the octal socket located on the rear apron of the chassis. It provides connections for external duplication of the functions of the plate switch and provides 110 VAC for antenna or receiver muting relay operation when the plate switch is on. Power for accessory equipment, intended primarily for the Heathkit SB-10 SSB adapter, is also available with 350 V, 85 ma at pin 6 and 6.3 VAC, 3.5 amps at pin 7. Pin 5 is the ground end of the final amplifier and driver bias string to allow control of the standby bias in SSB operation. Pin 8 provides an auxiliary ground in the event that shielded cable is used for remote operation.

The accessory contacts at the terminal board in the center of the rear apron of the chassis are initially wired "normally closed" for receiver muting. These contacts are actuated when the plate switch is on. If it is desired to perform a function requiring normally open contacts, merely reconnect the wire at lug 3 of the relay to lug 2.

The two close spaced coax receptacles provide easy conversion of the TX-1 to SSB operation in conjunction with the connections available at the accessory socket. With the mode switch in SSB position, the coax receptacle nearest the two screw terminal strip provides RF excitation for the SSB adapter while the other coax receptacle is the input to the class AB_1 final amplifier.

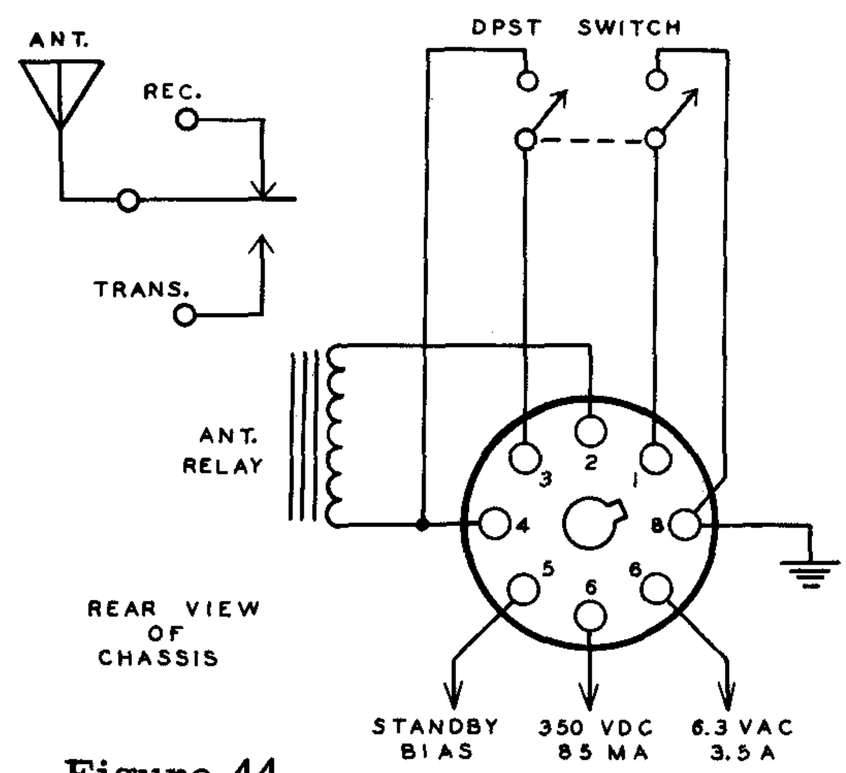

Figure 44

EXCITER OPERATION

The TX-1 is well suited for use as an exicter for higher powered final amplifiers running up to the legal limit in both AM and SSB operation. RF excitation is available at the antenna output connector.

In AM operation, audio output at 500 ohms can be made available for driving a higher powered modulator by means of a simple circuit modification, as follows:

To remove high voltage from the secondary of the modulation transformer, remove the jumper between JW-2 and JS-5 and between JW-1 and lug 1 of the HV filter capacitor JY. To bring the audio out of the transmitter, disconnect the wires to JA_t-1 and JA_t-4 and then connect a wire between JW-1 and JA_t-1 and between JW-3 and JA_t-4. Dress the wires disconnected from JA_t-1 and JA_t-4 out of the way and wrap with tape to prevent shorting to the chassis. Now the audio will appear on pins 1 and 3 of the accessory socket. This modification disables the remote control connections on the accessory socket.

ANTENNAS

The pi network output circuit of the TX-1 will match pure resistive loads from approximately 50 to 600 ohms. Therefore, the transmitter will match antennas and unbalanced lines within these limits, provided such antennas or lines are non-reactive. However, for best results, it is strongly recommended that the antenna and transmission line system selected present an unbalanced 50 to 75 ohm resistive load to the output of the transmitter. Most commercial or "home-brewed" antennas, including beams, verticals and trapped antennas, in use today are designed to be fed with 50 or 75 ohm coax. If an antenna with a balanced feedline is desired, it is recommended a set of balun coils (such as the Heathkit Model B-1) or an antenna coupler be obtained. Such units are readily available commercially or can be built from published literature at a reasonable cost. An antenna coupler is almost a necessity to properly match a pi output network to antennas having single wire feeds, multiband antennas with tuned transmission lines, or antenna with high impedance, balanced feedlines, such as a "V" or rhombic antenna.

Much has been published on the subject of antennas and excellent articles can be found in the ARRL Handbook, Radio Handbook, and in most issues of CQ and QST.

Whatever type of antenna system is used, the maximum loading point of 250 ma in the final amplifier should not be exceeded. In many instances the transmitter will load to a higher level, but the harmonic suppression of the pi output network is better if the output loading capacitor is not reduced to minimum value. Furthermore, the extra 10 or 15 watts which would be gained by maximum loading would not make any appreciable difference at the receiving end of the transmission.

REPLACEMENTS

Material supplied with Heathkits has been carefully selected to meet design requirements and ordinarily will fulfill its function without difficulty. Occasionally improper instrument operation can be traced to a faulty tube or component. Should inspection reveal the necessity for replacement, write to the Heath Company and supply all of the following information:

A. Thoroughly identify the part in question by using the part number and description found in the manual parts list.
B. Identify the type and model number of kit in which it is used.
C. Mention the order number and date of purchase.
D. Describe the nature of defect or reason for requesting replacement.

The Heath Company will promptly supply the necessary replacement. Please do not return the original component until specifically requested to do so. Do not dismantle the component in question as this will void the guarantee. If tubes are to be returned, pack them carefully to

prevent breakage in shipment as broken tubes are not eligible for replacement. This replacement policy does not cover the free replacement of parts that may have been broken or damaged through carelessness on the part of the kit builder.

SERVICE

In event continued operational difficulties of the completed instrument are experienced, the facilities of the Heath Company Service Department are at your disposal. Your instrument may be returned for inspection and repair for a service charge of $30.00 plus the cost of any additional material that may be required. THIS SERVICE POLICY APPLIES ONLY TO COMPLETED INSTRUMENTS CONSTRUCTED IN ACCORDANCE WITH THE INSTRUCTIONS AS STATED IN THE MANUAL. Instruments that are not entirely completed or instruments that are modified in design will not be accepted for repair. Instruments showing evidence of acid core solder or paste fluxes will be returned not repaired.

The Heath Company is willing to offer its full cooperation to assist you in obtaining the specified performance level in your instrument. Factory repair service is available for a period of one year from the date of purchase or you may contact the Engineering Consultation Department by mail. For information regarding possible modification of existing kits, it is suggested that you refer to any one or more of the many publications that are available on all phases of electronics. They can be obtained at or through your local library, as well as at any electronic outlet store. Although the Heath Company sincerely welcomes all comments and suggestions, it would be impossible to design, test, evaluate and assume responsibility for proposed circuit changes for specific purposes. Therefore, such modifications must be made at the discretion of the kit builder according to information which will be much more readily available from some local source.

SHIPPING INSTRUCTIONS

Before returning a unit for service, be sure that all parts are securely mounted.

ATTACH A TAG TO THE INSTRUMENT GIVING NAME, ADDRESS AND TROUBLE EXPERIENCED.

Pack in a rugged container, preferably wood, using at least three inches of shredded newspaper or excelsior on all sides. DO NOT SHIP IN THE ORIGINAL KIT CARTON AS THIS CARTON IS NOT CONSIDERED ADEQUATE FOR SAFE SHIPMENT OF THE COMPLETED INSTRUMENT. Ship by prepaid express if possible. Return shipment will be made by express collect. Note that a carrier cannot be held liable for damage in transit if packing, in HIS OPINION, is insufficient.

SPECIFICATIONS

All prices are subject to change without notice. The Heath Company reserves the right to discontinue instruments and to change specifications at any time without incurring any obligation to incorporate new features in instruments previously sold.

WARRANTY

Heath Company warrants that for a period of three months from the date of shipment, all Heathkit parts shall be free of defects in materials and workmanship under normal use and service and that in fulfillment of any breach of such warranty, Heath Company shall replace such defective parts upon the return of the same to its factory. The foregoing warranty shall apply only to the original buyer, and is and shall be in lieu of all other warranties, whether express or implied and of all other obligations or liabilities on the part of Heath Company and in no event shall Heath Company be liable for any anticipated profits, consequential damages, loss of time or other losses incurred by the buyer in connection with the purchase, assembly or operation of Heathkits or components thereof. No replacement shall be made of parts damaged by the buyer in the course of handling or assembling Heathkit equipment.

NOTE: The foregoing warranty is completely void and we will not replace, repair or service instruments or parts thereof in which acid core solder or paste fluxes have been used.

HEATH COMPANY

PART No.	PARTS Per Kit	DESCRIPTION
Resistors		
1-7	1	680 ohm 1/2 watt
1-9	2	1000 ohm 1/2 watt
1-22	1	22 K ohm 1/2 watt
1-24	2	33 K ohm 1/2 watt
1-25	3	47 K ohm 1/2 watt
1-26	1	100 K ohm 1/2 watt
1-33	2	470 K ohm 1/2 watt
1-38	2	3.3 megohm 1/2 watt
1-2A	1	1000 ohm 1 watt
1-4A	1	8.2 K ohm 1 watt
1-5A	1	22 K ohm 1 watt
1-23A	1	2.2 K ohm 1 watt
1-24A	2	4.7 K ohm 1 watt
1-25A	1	6.8 K ohm 1 watt
1-26A	1	15 K ohm 1 watt
1-46A	1	27 K ohm 1 watt
1-47A	1	3.9 K ohm 1 watt
1-1B	1	2.7 K ohm 2 watt
1-17B	1	6.8 K ohm 2 watt
2-94	1	.1 ohm 1/2 watt precision
2-95	1	1.02 ohm 1/2 watt precision
2-96	1	5.55 ohm 1/2 watt precision
2-130	1	.2 ohm 1/2 watt precision
2-10B	1	1 megohm 2 watt precision
3-4G	1	5 K ohm 7 watt
3-8J	3	15 K ohm 10 watt
3-2Y	1	30 K ohm 50 watt center-tapped
Capacitors		
20-1	3	47 mmf silver mica 600 volt
20-3	2	200 mmf mica 600 volt
20-4	2	270 mmf mica 600 volt
20-11	2	100 mmf mica 600 volt
20-33	2	.001 mf mica 600 volt
20-42	2	510 mmf silver mica 600 volt
20-48	1	.001 mf 2000 volt
20-76	1	68 mmf silver mica 5%
20-77	1	24 mmf silver mica 5%
20-78	1	56 mmf silver mica 5%
21-16	1	.01 mf disc
21-25	2	1300 mmf disc
21-27	28	.005 mf disc
21-28	1	10 mmf N750
21-29	2	4.7 mmf N750
21-31	1	.02 mf disc
21-53	3	.001 mf feed-through
21-54	1	75 mmf N750
21-55	1	500 mmf 5000 volt
23-11	1	.1 mf 600 volt
23-53	2	.1 mf paper 400 volt
23-81	2	.01 mf 600 volt feed-through
25-4	1	10 mf 25 volt electrolytic

PART No.	PARTS Per Kit	DESCRIPTION
25-10	1	20-20-20 mf 450 volt electrolytic
25-19	2	20 mf 150 volt electrolytic
25-28	1	100 mf 50 volt electrolytic
25-34	2	125 mf 450 volt electrolytic
25-35	1	2 mf 50 volt electrolytic
26-22	1	75 mmf variable
26-25	1	350 mmf variable
26-43	1	7 & 14 mmf differential variable
26-44	3	15 mmf midget variable
26-45	1	452 mmf per section, 3 gang variable
Coils - Choke - Transformers		
40-61	1	10-15 M driver coil
40-62	1	20 M slug tuned coil
40-63	1	40 M slug tuned coil
40-115	1	160 M VFO coil
40-116	2	40 M VFO coil
40-117	1	driver tank coil
40-118	1	final tank coil
40-119	1	10 M final tank coil
45-4	3	1.1 mh RFC
45-13	2	47 ohm parasitic choke
45-14	2	2.5 mh RFC
45-15	1	1 mh 500 ma RFC
45-16	1	10 mh RFC
45-17	3	line filter choke
45-28	6	line filter choke
45-31	1	11 uh RFC
46-4	1	5 HY audio choke
46-10	1	plate filter choke 400 ma
46-11	1	LV filter choke 150 ma
51-23	1	driver transformer
51-34	1	modulation transformer
54-30	1	plate transformer
54-37	1	filament transformer
54-65	1	power transformer
Sockets - Terminal Strips - Wafers - Knobs		
431-1	4	1-lug terminal strip (no gnd)
431-2	6	2-lug terminal strip (no gnd)
431-3	1	3-lug terminal strip (no gnd)
431-5	2	4-lug terminal strip (no gnd)
431-6	1	2-lug screw terminal strip
431-10	4	3-lug terminal strip (center gnd)
431-11	4	5-lug terminal strip (center gnd)
431-12	4	4-lug terminal strip (#2 gnd)
431-14	2	2-lug terminal strip (one gnd)
432-16	1	microphone connector
434-34	5	7-pin miniature socket
434-35	1	7-pin miniature shield ceramic socket

PART No.	PARTS Per Kit	DESCRIPTION
434-39	1	octal mica socket
434-42	1	phono jack
434-43	1	9-pin miniature shield socket
434-44	5	bayonet socket
434-38	1	crystal socket
434-53	5	octal ceramic saddle socket
434-54	2	octal ceramic wafer socket
434-56	2	9-pin miniature socket
434-71	1	red jewel candelabra pilot light assembly complete
434-75	2	9-pin miniature ceramic socket
436-5	3	coaxial connector
436-13	1	phone jack
438-4	1	phono plug
438-11	1	fuse plug
462-58	1	aluminum knob 2 1/4" dia.
462-59	2	aluminum knob 1 3/4" dia.
462-60	6	aluminum knob 1 1/4" dia.
462-61	1	aluminum knob 9/16" dia.
463-15	1	dial pointer
481-1	1	metal capacitor mounting wafer
481-3	2	insulated capacitor mounting wafer

Hardware Package #1

250-7	3	#6-32 x 3/16" RHMS
250-9	40	#6-32 x 3/8" RHMS
250-13	5	#6-32 x 1" RHMS
250-29	3	#6-32 x 3/4" RHMS
250-31	100	#6-32 x 1/4" RHMS
250-48	2	#6-32 x 1/2" RHMS
252-3	125	#6-32 nut
254-1	125	#6 lockwasher

Hardware Package #2

250-8	38	#6 sheet metal screw
250-18	27	#8-32 x 3/8" RHMS
250-49	50	#3-48 x 1/4" PHMS
252-1	50	#3-48 nut
252-4	27	#8-32 nut
252-7	28	3/8 x 32 nut
254-2	27	#8 lockwasher
254-7	50	#3 lockwasher

Hardware Package #3

250-93	27	#8-32 Allen head set screw x 1/4"
250-95	1	#5-40 x 3/4" RHMS
251-1	11	#6 spade lugs
252-33	3	#5-40 nut
254-4	20	3/8" lockwasher

Hardware Package #4

250-4	2	#4-40 x 3/8" RHMS
250-28	6	#6-32 x 1/4" set screw
250-34	2	#4-40 x 1/2" RHMS
250-50	10	#10-32 x 3/8" Phillips head MS
250-51	8	#10 sheet metal screw
250-52	4	#4-40 x 1/4" RHMS
250-94	1	#10-24 x 4 3/4" RHMS
250-105	1	#8-32 x 1/8" Allen head set screw
252-15	2	#4-40 small nut
252-22	4	#6 Tinnerman Nut
252-30	1	#10-24 nut
252-31	1	#10-24 wing nut
253-1	5	#6 fiber washer
253-6	1	#10 fiber washer
253-10	11	3/8" flat washer
253-11	9	1/4" E retaing washer
253-19	2	#10 large flat washer
253-21	17	5/32" flat washer
254-3	1	#10 lockwasher
254-9	7	#4 lockwasher
255-1	5	#6 x 1/8" spacer
255-3	7	#6 x 3/8" spacer
255-16	2	dial drive spacer
255-17	1	dial stop spacer
258-1	1	dial cord spring
258-4	1	dial stop spring
258-10	1	dial drum spring
259-1	25	#6 solder lug
259-6	5	#6 small solder lug
259-10	6	3/8" control solder lug

Controls - Switches

10-35	2	.5 megohm pot, audio taper, slotted
10-57	1	10 K ohm lin. pot, tab mount
10-68	1	.5 megohm pot, audio taper
10-69	1	5 K ohm pot, slotted
11-20	1	25 K ohm 4 watt pot
61-3	1	DPST toggle switch (with hardware)
61-4	1	SPST toggle switch (with hardware)
61-7	1	SPDT toggle switch (with hardware)
63-94	1	1 sec, 2 pole, 5 pos. meter switch
63-151	1	1 sec, 2 pole, 2 pos. XTAL-VFO switch
63-196	1	3 sec, 6 pole, 3 pos. mode switch

PART No.	PARTS Per Kit	DESCRIPTION
Controls-Switches (con't)		
63-153	1	2 sec, 2 pole, 5 pos. exciter band switch
63-154	1	1 sec, 3 pole, 4 pos. VFO band switch
63-155	1	1 sec, 1 pole, 5 pos. final band switch
64-3	1	SPST pushbutton switch
Meters - Tubes		
407-49	1	1 ma 50 ohm meter
411-11	1	6AU6 Tube
411-25	1	12AU7 Tube
411-26	1	12 AX7 Tube
411-35	1	5V4 Tube
411-40	1	6AL5 Tube
411-46	2	OB2 Tube
411-59	1	OA2 Tube
411-60	1	6AQ5 Tube
411-63	1	6CL6 Tube
411-69	1	12BY7 Tube
411-75	2	6146 Tube
411-76	2	5R4GY Tube
411-77	1	5763 Tube
411-112	2	6CA7/EL34 Tube
412-1	5	#47 pilot light
412-2	1	3 watt 110 volt light
412-11	1	NE-2 neon bulb
421-9	2	7 amp 3 ag Slo-Blo fuse, 125 volt
Sheet Metal Parts		
100-M118	1	Chassis base
100-M135	1	Dial drive back plate
100-M136	1	Dial drive front plate
200-M166	1	VFO sub-chassis
202-M19	1	VFO sub-chassis end
204-M151	1	Dial pointer bracket
204-M153	1	Dial assembly support bracket
204-M154	1	Audio filter mounting bracket
204-M155	1	Filter capacitor mounting bracket
204-M156	1	Variable capacitor mounting bracket
204-M157	1	Control and tube mounting bracket
204-M158	1	Meter mounting bracket
204-M159	1	Dial stop bracket
204-M160	1	Control shaft support bracket
204-M208	1	Bias control bracket
205-M82	1	VFO cover plate
205-M83	1	Chassis top plate

PART No.	PARTS Per Kit	DESCRIPTION
Sheet Metal Parts (con't)		
206-M60	1	Final amplifier front shield
206-M61	1	Final amplifier shield wraparound
206-M62	1	Final amplifier shield top
206-M63	1	Driver partition shield
206-M64	1	Driver shield
206-M65	1	Line cord terminal shield
203-M148F191	1	Front panel
Miscellaneous		
57-13	3	Selenium rectifier
69-5	1	110 vac DPDT relay
71-2	1	Feedthrough insulator
71-4	2	Stand-off insulator
73-1	9	3/8" rubber grommet
73-2	6	3/4" rubber grommet
73-3	1	1/2" rubber grommet
73-4	2	5/16" rubber grommet
74-4	1	Insulating tape roll
84-2	1	Strip package component assembly
89-4	1	Line cord
90-82	1	Cabinet
100-119	1	Cable harness
100-193	1	Dial drive pinion gear assembly
100-194	1	Dial drive gear assembly
100-M19	1	1 1/4" pulley
100-M120	1	Dial drive stop cam
100-M121	1	Dial pulley
100-M122	1	Dial drum shaft
100-M125	1	Dial drum left end plug
100-M126	1	VFO switch drive plate
100-M127	1	Band switch drive plate
100-M128	1	XTAL-VFO switch drive plate
100-M129	2	Single link drive arm
100-M130	1	Dual link drive arm
100-M131	1	Dial escutcheon
100-M132	2	Dial drum support
205-71F	1	Meter escutcheon
205-73F193	1	Panel escutcheon
206-3	1	Tube shield
206-6	1	Spirashield 1/8" ID, 12" long
206-24	1	Spirashield 3/16" ID 8" long
206-25	1	Tube shield 1 3/4"
206-43	6	Coaxial jack shield
206-54	2	Tube shield 2 3/8"
206-55	2	Tube shield base
206-66	1	Heat shield insert
207-3	1	Plastic cable clamp 1/8"
207-5	1	Plastic cable clamp 3/16"
207-19	1	Plastic cable clamp 5/16"

PART No.	PARTS Per Kit	DESCRIPTION
Miscellaneous (con't)		
260-12	2	Aluminum plate cap
261-6	4	Rubber feet
266-M7	1	Short link arm
266-M8	1	Long link arm
340-2	1	length #20 bare wire (tinned)
340-3	1	length #16 bare wire (tinned)
343-2	1	length RG-58A/U wire
344-1	4	length Hookup wire (4 colors)
344-6	1	length #18 hookup wire
346-1	2	length 1/8" insulated sleeving
346-5	1	length 1/4" insulated sleeving
349-3	1	length glass core dial cord
349-4	1	Long drive band
349-5	1	Short drive band
390-39	1	Rear apron adhesive label
391-3	1	Siver nameplate
451-12	1	Dial drive nylon cluster gear
451-15	1	Tuning drive gear
451-16	1	Tuning drive anti-back-lash gear
452-3	1	Dial drive gear pin 1/16" x 7/16"
453-25	1	Driver tune shaft
453-26	1	Final tune shaft
453-27	1	Loading control shaft
453-28	1	XTAL-VFO switch drive shaft
453-29	1	Driver capacitor tune shaft
453-30	1	Band switch shaft
453-32	1	Dial drive cluster gear shaft
453-53	1	Dial stop rider shaft
455-9	3	3/8-32 x 1/4 ID bushing
455-10	5	3/8-32 x 17/64 ID bushing
455-17	1	3/8-32 x 17/64 ID bushing 9/16" long
455-18	4	3/8-32 x 1/4 ID bushing 9/16" long
456-7	2	Couplings 1/4" to 1/4"
464-10	1	Plastic drum dial screened
466-7	1	Plastic pulley
466-10	4	Drive band pulley
485-M7	1	Dial drum right end plug
490-6	1	5/64" Allen wrench
595-192	1	Instruction manual

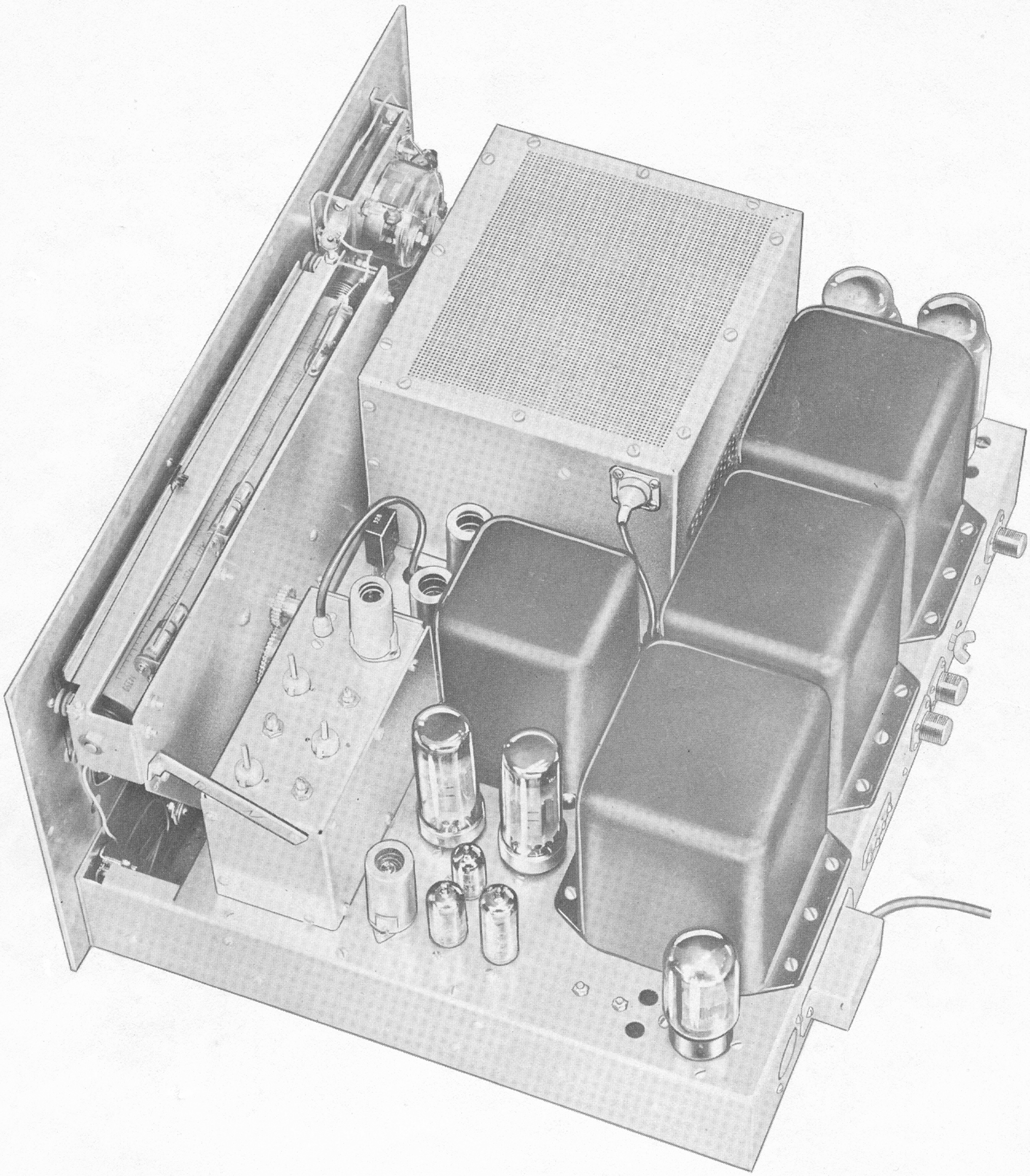

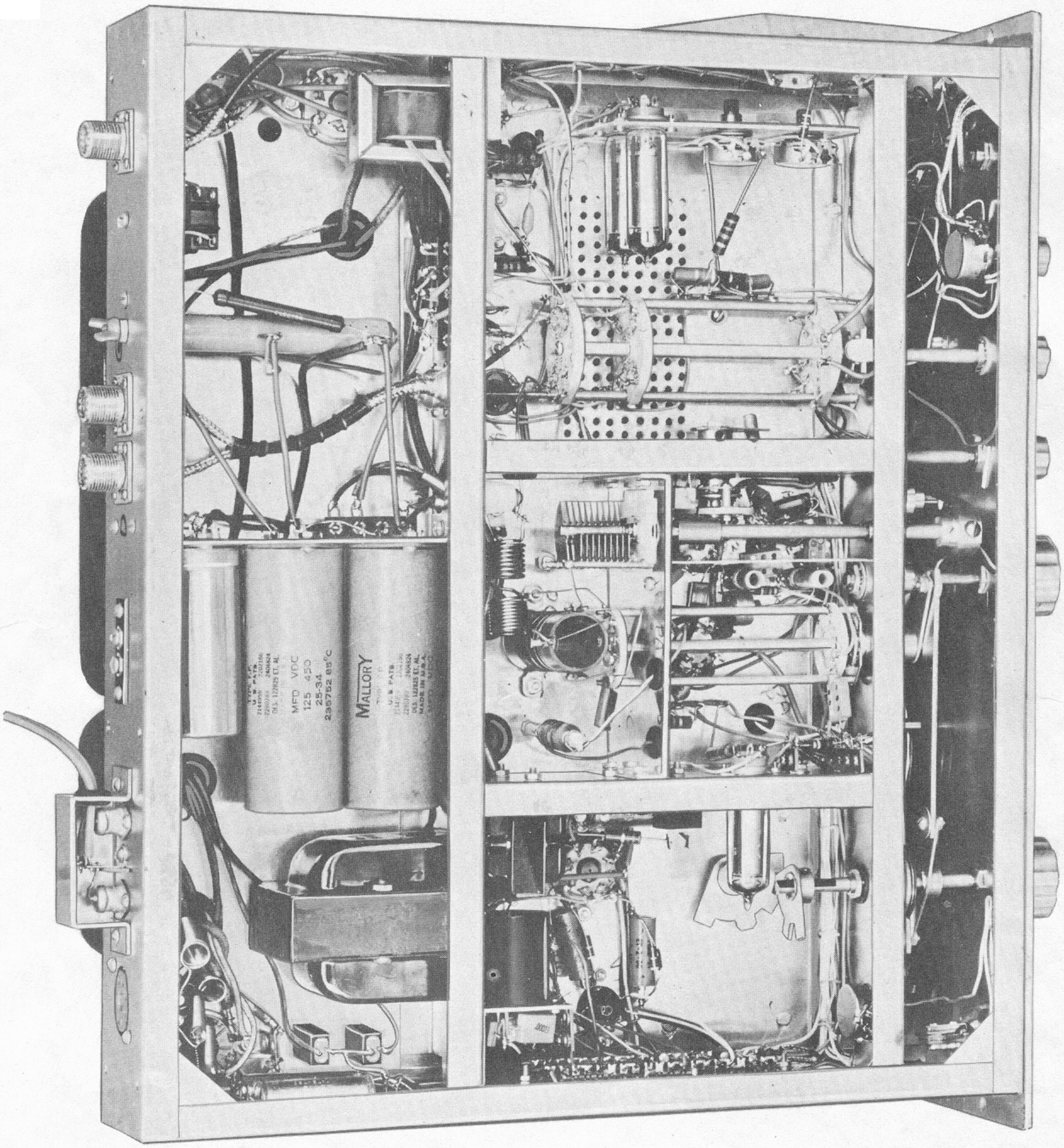
MFD VDC
125 450
25-34
235752 85°C
MALLORY

HELPFUL KIT BUILDING INFORMATION

Before attempting actual kit construction read the construction manual through thoroughly to familiarize yourself with the general procedure. Note the relative location of pictorials and pictorial inserts in respect to the progress of the assembly procedure outlined.

This information is offered primarily for the convenience of novice kit builders and will be of definite assistance to those lacking thorough knowledge of good construction practices. Even the advanced electronics enthusiast may benefit by a brief review of this material before proceeding with kit construction. In the majority of cases, failure to observe basic instruction fundamentals is responsible for inability to obtain desired level of performance.

RECOMMENDED TOOLS

The successful construction of Heathkits does not require the use of specialized equipment and only basic tools are required. A good quality electric soldering iron is essential. The preferred size would be a 100 watt iron with a small tip. The use of long nose pliers and diagonal or side cutting pliers is recommended. A small screw driver will prove adequate and several additional assorted screw drivers will be helpful. Be sure to obtain a good supply of rosin core type radio solder. Never use separate fluxes, paste or acid solder in electronic work.

ASSEMBLY

In the actual mechanical assembly of components to the chassis and panel, it is important that the procedure shown in the manual be carefully followed. Make sure that tube sockets are properly mounted in respect to keyway or pin numbering location. The same applies to transformer mountings so that the correct transformer color coded wires will be available at the proper chassis opening.

Make it a standard practice to use lock washers under all 6-32 and 8-32 nuts. The only exception being in the use of solder lugs—the necessary locking feature is already incorporated in the design of the solder lugs. A control lock washer should always be used between the control and the chassis to prevent undesirable rotation in the panel. To improve instrument appearance and to prevent possible panel marring use a control flat nickel washer under each control nut.

When installing binding posts that require the use of fiber insulating washers, it is good practice to slip the shoulder washer over the binding post mounting stud before installing the mounting stud in the panel hole provided. Next, install a flat fiber washer and a solder lug under the mounting nut. Be sure that the shoulder washer is properly centered in the panel to prevent possible shorting of the binding post.

WIRING

When following wiring procedure make the leads as short and direct as possible. In filament wiring requiring the use of a twisted pair of wires allow sufficient slack in the wiring that will permit the twisted pair to be pushed against the chassis as closely as possible thereby affording relative isolation from adjacent parts and wiring.

When removing insulation from the end of hookup wire, it is seldom necessary to expose more than a quarter inch of the wire. Excessive insulation removal may cause a short circuit condition in respect to nearby wiring or terminals. In some instances, transformer leads of solid copper will have a brown baked enamel coating. After the transformer leads have been trimmed to a suitable length, it is necessary to scrape the enamel coating in order to expose the bright copper wire before making a terminal or soldered connection.

In mounting parts such as resistors or condensers, trim off all excess lead lengths so that the parts may be installed in a direct point-to-point manner. When necessary use spaghetti or insulated sleeving over exposed wires that might short to nearby wiring.

It is urgently recommended that the wiring dress and parts layout as shown in the construction manual be faithfully followed. In every instance, the desirability of this arrangement was carefully determined through the construction of a series of laboratory models.

SOLDERING

Much of the performance of the kit instrument, particularly in respect to accuracy and stability, depends upon the degree of workmanship used in making soldered connections. Proper soldered connections are not at all difficult to make but it would be advisable to observe a few precautions. First of all before a connection is to be soldered, the connection itself should be clean and mechanically strong. Do not depend on solder alone to hold a connection together. The tip of the soldering iron should be bright, clean and free of excess solder. Use enough heat to thoroughly flow the solder smoothly into the joint. Avoid excessive use of solder and do not allow a flux flooding condition to occur which could conceivably cause a leakage path between adjacent terminals on switch assemblies and tube sockets. This is particularly important in instruments such as the VTVM, oscilloscope and generator kits. Excessive heat will also burn or damage the insulating material used in the manufacture of switch assemblies. Be sure to use only good quality rosin core radio type solder.

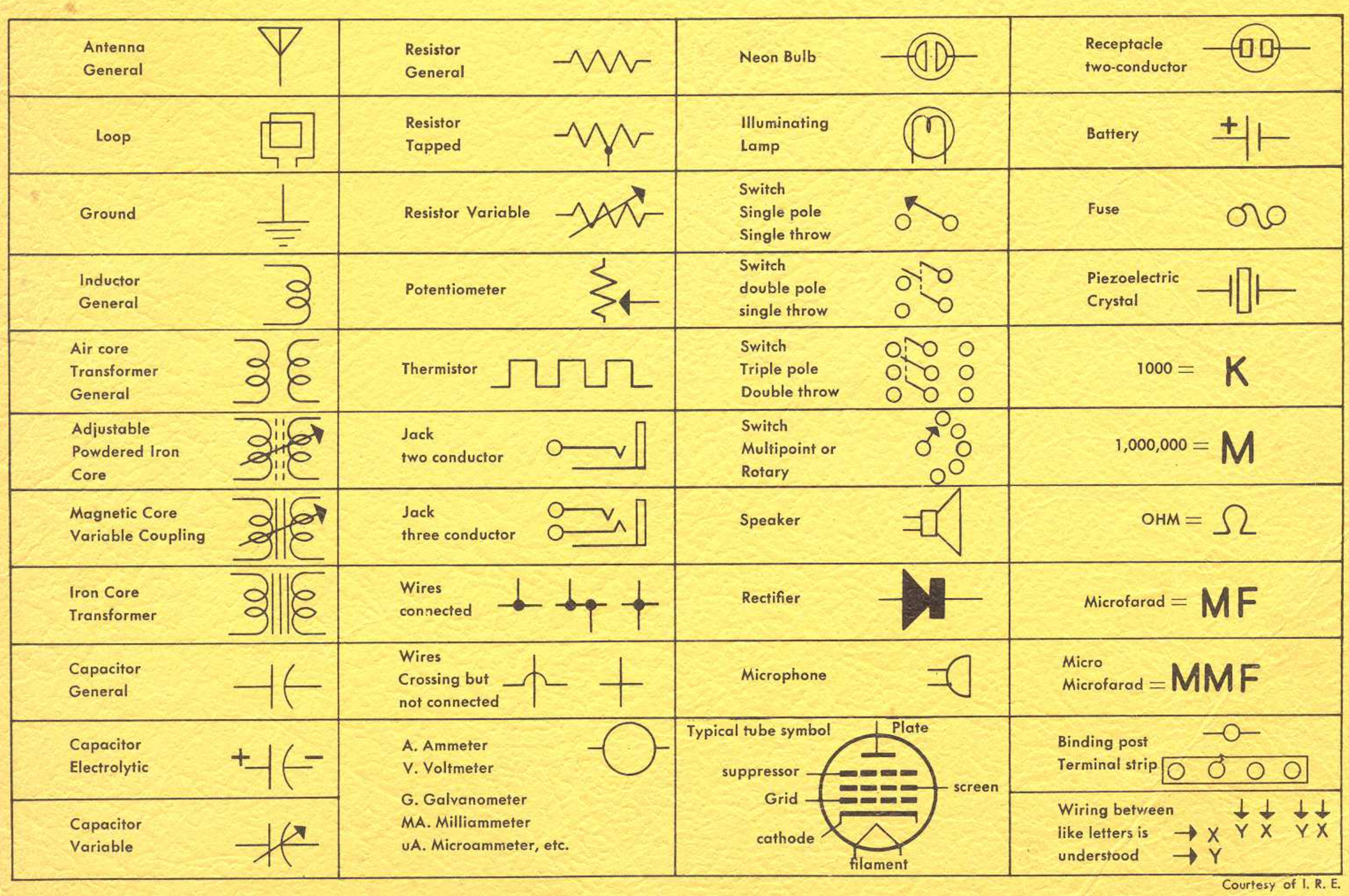

Courtesy of I. R. E.

HEATH COMPANY

A Subsidiary of Daystrom Inc.

THE WORLD'S FINEST ELECTRONIC EQUIPMENT IN KIT FORM

BENTON HARBOR, MICHIGAN

10/6/58

Copyright 1958
Heath Company
Benton Harbor, Michigan

Litho in U. S. A.