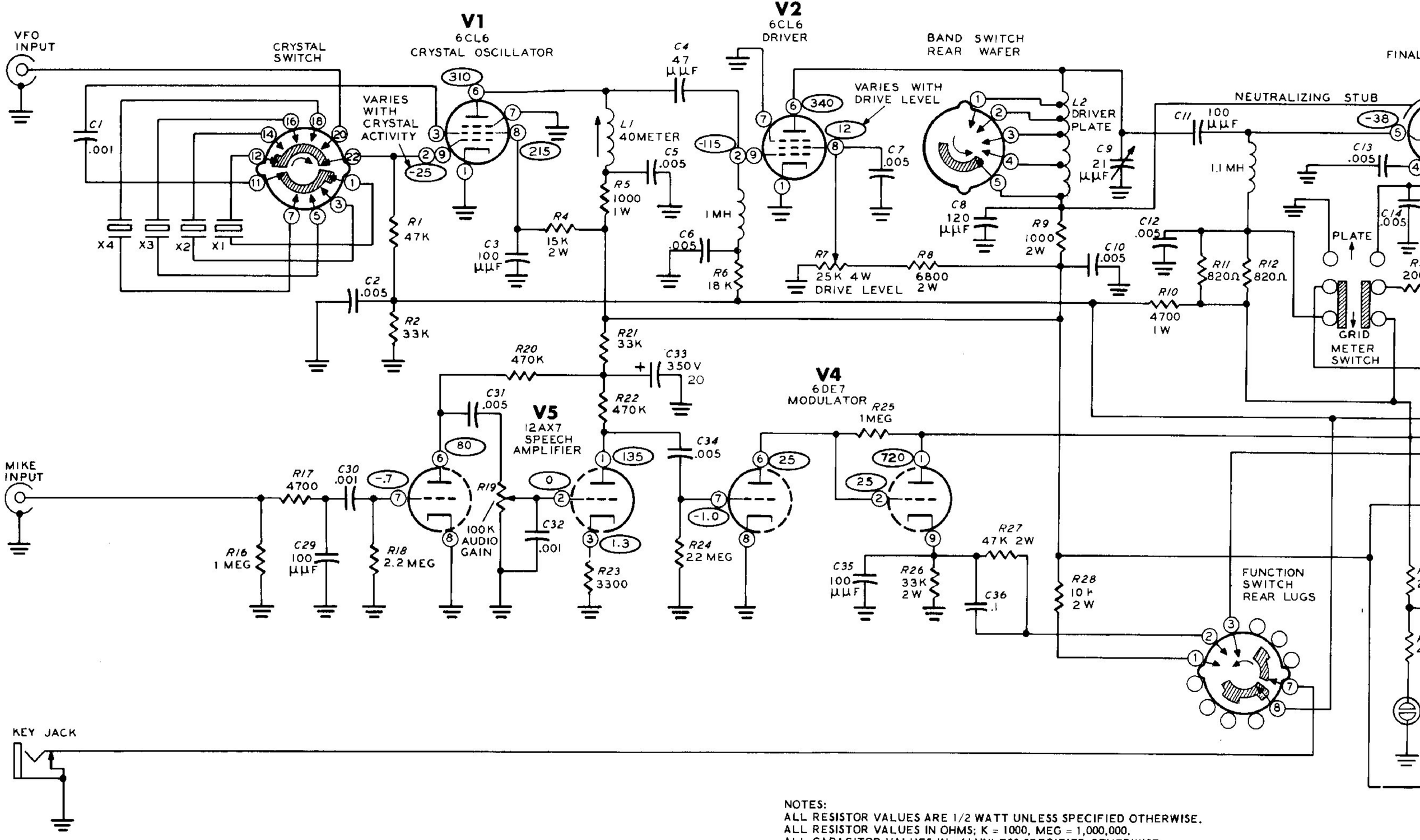

Schematic of the HEATHKIT®
AMATEUR TRANSMITTER
Model DX - 60B

NOTES:
ALL RESISTOR VALUES ARE 1/2 WATT UNLESS SPECIFIED OTHERWISE.
ALL RESISTOR VALUES IN OHMS; K = 1000, MEG = 1,000,000.
ALL CAPACITOR VALUES IN μfd UNLESS SPECIFIED OTHERWISE.
ALL SWITCHES, EXCEPT THE CRYSTAL SWITCH, ARE VIEWED FROM THE REAR. THE CRYSTAL SWITCH IS VIEWED FROM THE SHAFT END.
FUNCTION SWITCH SHOWN IN OFF POSITION.
BAND SWITCH SHOWN IN 80 METER POSITION.
( ) INDICATES VOLTAGE READINGS.
VOLTAGES TAKEN WITH FUNCTION SWITCH IN AM POSITION.
VOLTAGES TAKEN WITH AN 11 MEGOHM INPUT METER.
VOLTAGE READINGS ARE DC UNLESS SPECIFIED OTHERWISE.
VOLTAGES MAY VARY ±10%.
VOLTAGES TAKEN WITH DUMMY LOAD CONNECTED.

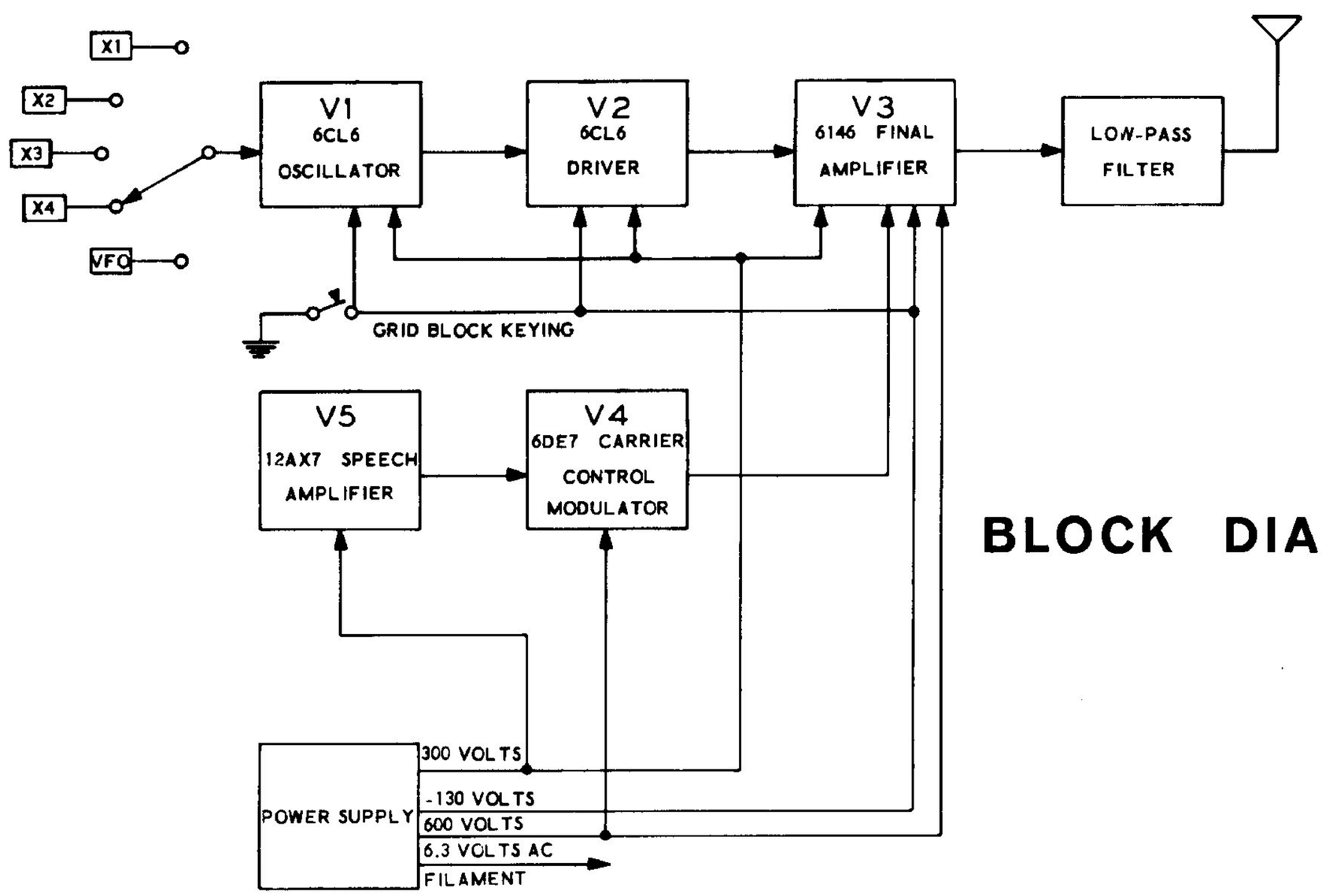

BLOCK DIAGRAM

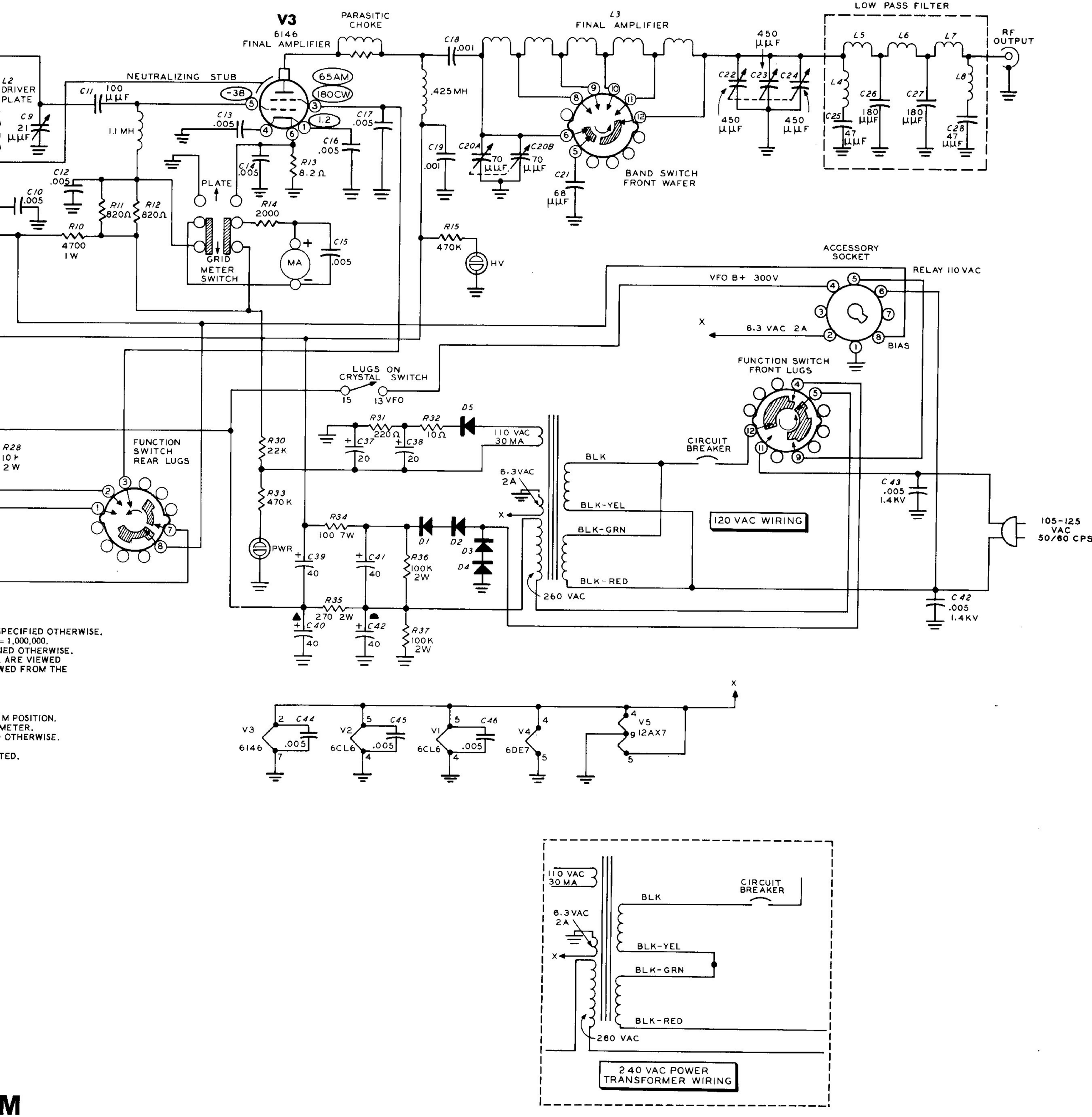
V3
6146
FINAL AMPLIFIER
PARASITIC CHOKE
L3
FINAL AMPLIFIER
LOW PASS FILTER
RF OUTPUT
L2 DRIVER PLATE
C9 21 μμF
NEUTRALIZING STUB
C11 100 μμF
1.1 MH
-38
65AM
180CW
1.2
C13 .005
C14 .005
R13 8.2Ω
C16 .005
C17 .005
C18 .001
.425 MH
C19 .001
C20A 70 μμF
C20B 70 μμF
C21 68 μμF
BAND SWITCH FRONT WAFER
450 μμF
C22
C23
C24
450 μμF
450 μμF
L4
L5
L6
L7
L8
C25 47 μμF
C26 180 μμF
C27 180 μμF
C28 47 μμF
C12 .005
C10 .005
R10 4700 1W
R11 820Ω
R12 820Ω
PLATE
R14 2000
GRID METER SWITCH
MA
C15 .005
R15 470K
HV
ACCESSORY SOCKET
VFO B+ 300V
RELAY 110 VAC
X
6.3 VAC 2A
BIAS
FUNCTION SWITCH FRONT LUGS
LUGS ON CRYSTAL SWITCH
15
13 VFO
D5
R31 220Ω
R32 10Ω
110 VAC 30 MA
C37 20
C38 20
R28 10 Ω 2 W
FUNCTION SWITCH REAR LUGS
R30 22K
R33 470 K
PWR
CIRCUIT BREAKER
BLK
6.3 VAC 2A
BLK-YEL
BLK-GRN
BLK-RED
120 VAC WIRING
C43 .005 1.4KV
105-125 VAC 50/60 CPS
R34 100 7W
C39 40
C41 40
D1
D2
D3
D4
R36 100K 2W
260 VAC
R35 270 2W
C40 40
C42 40
R37 100K 2W
C42 .005 1.4KV
SPECIFIED OTHERWISE.
= 1,000,000.
IED OTHERWISE.
ARE VIEWED
WED FROM THE
M POSITION.
METER.
OTHERWISE.
TED.
V3 6146
C44 .005
V2 6CL6
C45 .005
V1 6CL6
C46 .005
V4 6DE7
V5 12AX7
110 VAC 30 MA
CIRCUIT BREAKER
BLK
6.3 VAC 2A
BLK-YEL
BLK-GRN
BLK-RED
260 VAC
240 VAC POWER TRANSFORMER WIRING